FUNAI

SERVICE MANUAL

– EXTERNAL VOLUME –

This Service Manual is for the 32FL553P/10 (A33F1EP) and 32FL553/10 (A33F0EP) models.
For the 32FL553P/10 (A33F1EP) and 32FL553/10 (A33F0EP) models, the letter (A33F1EP or A33F0EP) is printed on the Serial Number Label on the back of the unit. Refer to the Serial Number Label below.

Serial No. Label

MANUFACTURED : APRIL 2013 P P10210001 – A33F1EP ※

"A33F1EP"

Serial No. Label

MANUFACTURED : APRIL 2013 P P10210001 – A33F0EP ※

"A33F0EP"

32˝ COLOR LCD TELEVISION

32FL553P/10 32FL553/10

FUNAI

32˝ COLOR LCD TELEVISION

32FL553P/10
32FL553/10

TABLE OF CONTENTS

The LCD panel is manufactured to provide many years of useful life. Occasionally a few non active pixels may appear as a tiny spec of color. This is not to be considered a defect in the LCD screen.

SPECIFICATIONS

< TUNER >

VHS/UHF Input ---------- 75Ω unbal., IEC Connector
Center IF ---------- SECAM-L 38.9MHz, SECAM-L' 33.9MHz

Description	Condition	Unit	Nominal	Limit
1. Video S/N	80	dB	---	40
2. Audio S/N	---	dB	---	40/40

< LCD PANEL >

Description	Condition	Unit	Nominal	Limit
1. Number of Pixels	Horizontal Vertical	pixels pixels	1366 768	--- ---
2. Viewing Angle	Horizontal Vertical	° °	-85 to 85 -80 to 80	-75 to 75 -70 to 70

<DVB-T>

Description	Condition	Unit	Nominal	Limit
1. RECEIVED FREQ.RANGE (-60dBm, 45ch.) *1, *2	+ -	kHz kHz	1000 900	500 167
2. INPUT DYNAMIC RANGE (mix./max)	1):*1 VHF HIGH 8ch. UHF 45ch.	dBuV dBuV	25/101 25/101	28/98 29/98
	2):*2 VHF HIGH 8ch. UHF 45ch.	dBuV dBuV	18/101 18/101	21/98 21/98
3. C/N PERFORMANCE (-50dBm)	1):*1 VHF HIGH 8ch. UHF 45ch.	dB dB	15 15	≦18 ≦18
	2):*2 VHF HIGH 8ch. UHF 45ch.	dB dB	11 11	≦14 ≦14
4. MULTIPATH (-50dBm) a. Performance with short delay echoes b. Performance with long delay echoes	UHF 45ch. 1):*3 2):*4 1):*3 2):*4	 dB dB dB dB	 18.7 14.0 19.1 13.0	 ≦23 ≦20 ≦23 ≦18

*1: modulation parameters = [8k 64QAM CR=2/3 GI=1/32]
*2: modulation parameters = [8k 16QAM CR=3/4 GI=1/8]
*3: modulation parameters = [2k 64QAM CR=2/3 GI=1/32]
*4: modulation parameters = [2k 16QAM CR=3/4 GI=1/32]

< VIDEO >

Description	Condition	Unit	Nominal	Limit
1. Over Scan	Horizontal Vertical	% %	5 5	--- ---
2. Color Temperature	AT 70% WHITE FIELD x y	°K	12000 0.272 0.278	--- ±0.015 ±0.015
3. Resolution	Horizontal Vertical	line line	400 350	--- ---
4. Brightness	AT 100% WHITE FIELD (AT RETAIL MODE)	cd/m^2	250	---

< AUDIO >

All items are measured across 8 Ω load at speaker output terminal.

Description	Condition	Unit	Nominal	Limit
1. Audio Output Power	2V rms input Lch/Rch Vol:MAX	W	8/8	7/7
2. Audio Distortion	500mW: Lch/Rch	%	1.5/1.5	3.0/3.0
3. Audio Freq. Response	−6dB: Lch −6dB: Rch	Hz Hz	--- ---	--- ---
4. Audio S/N	Lch/Rch	dB	---	≧45/45

Note: Nominal specifications represent the design specifications. All units should be able to approximate these. Some will exceed and some may drop slightly below these specifications. Limit specifications represent the absolute worst condition that still might be considered acceptable. In no case should a unit fail to meet limit specifications.

IMPORTANT SAFETY PRECAUTIONS

Prior to shipment from the factory, our products are strictly inspected for recognized product safety and electrical codes of the countries in which they are to be sold. However, in order to maintain such compliance, it is equally important to implement the following precautions when a set is being serviced.

Safety Precautions for LCD TV Circuit

1. **Before returning an instrument to the customer,** always make a safety check of the entire instrument, including, but not limited to, the following items:
   - **a.** Be sure that no built-in protective devices are defective and have been defeated during servicing. (1) Protective shields are provided on this chassis to protect both the technician and the customer. Correctly replace all missing protective shields, including any removed for servicing convenience. (2) When reinstalling the chassis and/or other assembly in the cabinet, be sure to put back in place all protective devices, including but not limited to, nonmetallic control knobs, insulating fishpapers, adjustment and compartment covers/shields, and isolation resistor/capacitor networks. **Do not operate this instrument or permit it to be operated without all protective devices correctly installed and functioning. Servicers who defeat safety features or fail to perform safety checks may be liable for any resulting damage.**
   - **b.** Be sure that there are no cabinet openings through which an adult or child might be able to insert their fingers and contact a hazardous voltage. Such openings include, but are not limited to, (1) spacing between the LCD module and the cabinet mask, (2) excessively wide cabinet ventilation slots, and (3) an improperly fitted and/or incorrectly secured cabinet back cover.
   - **c. Antenna Cold Check -** With the instrument AC plug removed from any AC source, connect an electrical jumper across the two AC plug prongs. Place the instrument AC switch in the on position. Connect one lead of an ohmmeter to the AC plug prongs tied together and touch the other ohmmeter lead in turn to each tuner antenna input exposed terminal screw and, if applicable, to the coaxial connector. If the measured resistance is less than 1.0 megohm or greater than 5.2 megohm, an abnormality exists that must be corrected before the instrument is returned to the customer. Repeat this test with the instrument AC switch in the off position.
   - **d. Leakage Current Hot Check -** With the instrument completely reassembled, plug the AC line cord directly into a 230 V AC outlet. (Do not use an isolation transformer during this test.) Use a leakage current tester or a metering system that complies with American National Standards Institute (ANSI) C101.1 Leakage Current for Appliances and Underwriters Laboratories (UL) 1410, (50.7). With the instrument AC switch first in the on position and then in the off position, measure from a known earth ground (metal water pipe, conduit, etc.) to all exposed metal parts of the instrument (antennas, handle brackets, metal cabinet, screw heads, metallic overlays, control shafts, etc.), especially any exposed metal parts that offer an electrical return path to the chassis. Any current measured must not exceed 0.5 milli-ampere. Reverse the instrument power cord plug in the outlet and repeat the test.

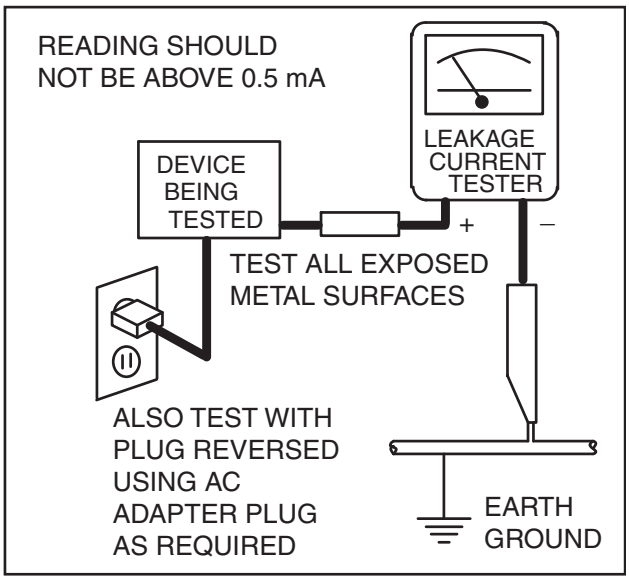

ANY MEASUREMENTS NOT WITHIN THE LIMITS SPECIFIED HEREIN INDICATE A POTENTIAL SHOCK HAZARD THAT MUST BE ELIMINATED BEFORE RETURNING THE INSTRUMENT TO THE CUSTOMER OR BEFORE CONNECTING THE ANTENNA OR ACCESSORIES.

2. Read and comply with all caution and safety-related notes on or inside the receiver cabinet, on the receiver chassis, or on the LCD module.
3. **Design Alteration Warning -** Do not alter or add to the mechanical or electrical design of this LCD TV receiver. Design alterations and additions, including, but not limited to circuit modifications and the addition of items such as auxiliary audio and/or video output connections, might alter the safety characteristics of this receiver and create a hazard to the user. Any design alterations or additions will void the manufacturer's warranty and may make you, the servicer, responsible for personal injury or property damage resulting therefrom.

4. **Hot Chassis Warning -**
   a. Some TV receiver chassis are electrically connected directly to one conductor of the AC power cord and maybe safety-serviced without an isolation transformer only if the AC power plug is inserted so that the chassis is connected to the ground side of the AC power source. To confirm that the AC power plug is inserted correctly, with an AC voltmeter, measure between the chassis and a known earth ground. If a voltage reading in excess of 1.0 V is obtained, remove and reinsert the AC power plug in the opposite polarity and again measure the voltage potential between the chassis and a known earth ground.
   b. Some TV receiver chassis normally have 85V AC(RMS) between chassis and earth ground regardless of the AC plug polarity. This chassis can be safety-serviced only with an isolation transformer inserted in the power line between the receiver and the AC power source, for both personnel and test equipment protection.
   c. Some TV receiver chassis have a secondary ground system in addition to the main chassis ground. This secondary ground system is not isolated from the AC power line. The two ground systems are electrically separated by insulation material that must not be defeated or altered.
5. Observe original lead dress. Take extra care to assure correct lead dress in the following areas: a. near sharp edges, b. near thermally hot parts-be sure that leads and components do not touch thermally hot parts, c. the AC supply, d. high voltage, and, e. antenna wiring. Always inspect in all areas for pinched, out of place, or frayed wiring. Check AC power cord for damage.
6. Components, parts, and/or wiring that appear to have overheated or are otherwise damaged should be replaced with components, parts, or wiring that meet original specifications. Additionally, determine the cause of overheating and/or damage and, if necessary, take corrective action to remove any potential safety hazard.
7. **Product Safety Notice -** Some electrical and mechanical parts have special safety-related characteristics which are often not evident from visual inspection, nor can the protection they give necessarily be obtained by replacing them with components rated for higher voltage, wattage, etc.. Parts that have special safety characteristics are identified by a ⚠ on schematics and in parts lists. Use of a substitute replacement that does not have the same safety characteristics as the recommended replacement part might create shock, fire, and/or other hazards. The product's safety is under review continuously and new instructions are issued whenever appropriate. Prior to shipment from the factory, our products are strictly inspected to confirm they comply with the recognized product safety and electrical codes of the countries in which they are to be sold. However, in order to maintain such compliance, it is equally important to implement the following precautions when a set is being serviced.

Precautions during Servicing

A. Parts identified by the ⚠ symbol are critical for safety.
Replace only with part number specified.

B. In addition to safety, other parts and assemblies are specified for conformance with regulations applying to spurious radiation. These must also be replaced only with specified replacements.
Examples: RF converters, RF cables, noise blocking capacitors, and noise blocking filters, etc.

C. Use specified internal wiring. Note especially:

1) Wires covered with PVC tubing
2) Double insulated wires
3) High voltage leads

D. Use specified insulating materials for hazardous live parts. Note especially:

1) Insulation Tape
2) PVC tubing
3) Spacers
4) Insulators for transistors.

E. When replacing AC primary side components (transformers, power cord, etc.), wrap ends of wires securely about the terminals before soldering.

F. Observe that the wires do not contact heat producing parts (heat sinks, oxide metal film resistors, fusible resistors, etc.)

G. Check that replaced wires do not contact sharp edged or pointed parts.

H. When a power cord has been replaced, check that 5~6 kg of force in any direction will not loosen it.

I. Also check areas surrounding repaired locations.

J. Use care that foreign objects (screws, solder droplets, etc.) do not remain inside the set.

K. When connecting or disconnecting the internal connectors, first, disconnect the AC plug from the AC supply outlet.

L. When installing parts or assembling the cabinet parts, be sure to use the proper screws and tighten certainly.

Safety Check after Servicing

Examine the area surrounding the repaired location for damage or deterioration. Observe that screws, parts and wires have been returned to original positions. Afterwards, perform the following tests and confirm the specified values in order to verify compliance with safety standards.

1. Clearance Distance

When replacing primary circuit components, confirm specified clearance distance (d) and (d') between soldered terminals, and between terminals and surrounding metallic parts. (See Fig. 1)

Table 1 : Ratings for selected area

AC Line Voltage	Clearance Distance (d), (d')
220 to 240 V	≥ 3mm(d) ≥ 8mm(d')

Note: This table is unofficial and for reference only. Be sure to confirm the precise values.

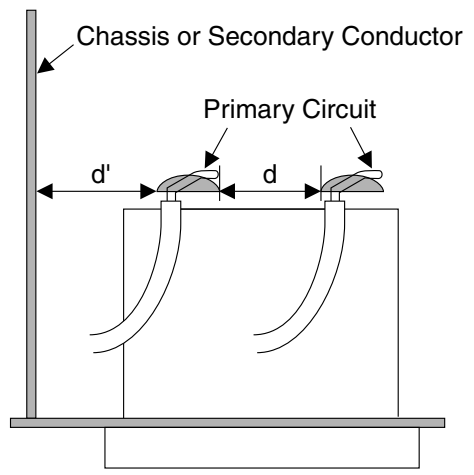

Fig. 1

2. Leakage Current Test

Confirm the specified (or lower) leakage current between B (earth ground, power cord plug prongs) and externally exposed accessible parts (RF terminals, antenna terminals, video and audio input and output terminals, microphone jacks, earphone jacks, etc.).

Measuring Method : (Power ON)

Insert load Z between B (earth ground, power cord plug prongs) and exposed accessible parts. Use an AC voltmeter to measure across both terminals of load Z. See Fig. 2 and following table.

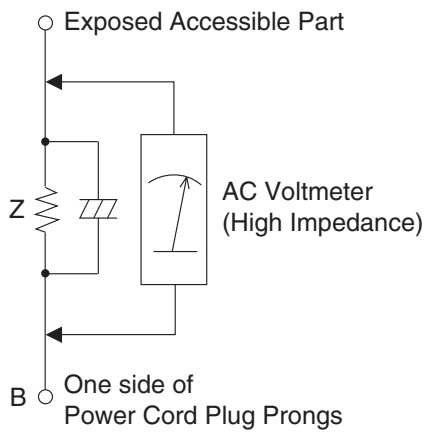

Fig. 2

Table 2: Leakage current ratings for selected areas

AC Line Voltage	Load Z	Leakage Current (i)	One side of power cord plug prongs (B) to:
220 to 240 V	2kΩ RES. Connected in parallel	i≤0.7mA AC Peak i≤2mA DC	RF or Antenna terminals
	50kΩ RES. Connected in parallel	i≤0.7mA AC Peak i≤2mA DC	A/V Input, Output

Note: This table is unofficial and for reference only. Be sure to confirm the precise values.

STANDARD NOTES FOR SERVICING

Circuit Board Indications

1. The output pin of the 3 pin Regulator ICs is indicated as shown.

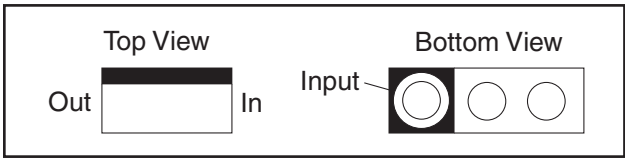

2. For other ICs, pin 1 and every fifth pin are indicated as shown.

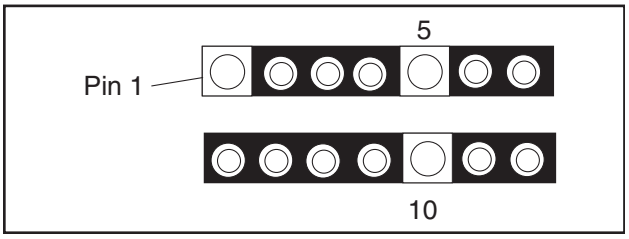

3. The 1st pin of every male connector is indicated as shown.

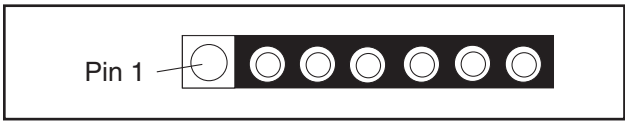

Pb (Lead) Free Solder

Pb free mark will be found on PCBs which use Pb free solder. (Refer to figure.) For PCBs with Pb free mark, be sure to use Pb free solder. For PCBs without Pb free mark, use standard solder.

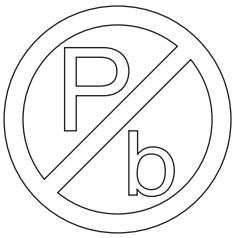

Pb free mark

How to Remove / Install Flat Pack-IC

1. Removal

With Hot-Air Flat Pack-IC Desoldering Machine:

1. Prepare the hot-air flat pack-IC desoldering machine, then apply hot air to the Flat Pack-IC (about 5 to 6 seconds). (Fig. S-1-1)

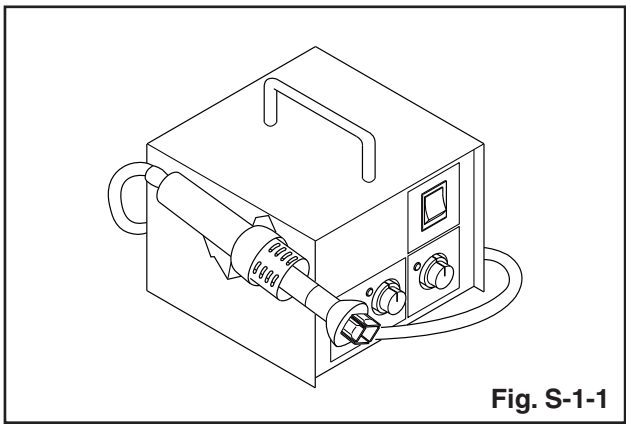

Fig. S-1-1

2. Remove the flat pack-IC with tweezers while applying the hot air.
3. Bottom of the flat pack-IC is fixed with glue to the CBA; when removing entire flat pack-IC, first apply soldering iron to center of the flat pack-IC and heat up. Then remove (glue will be melted). (Fig. S-1-6)
4. Release the flat pack-IC from the CBA using tweezers. (Fig. S-1-6)

CAUTION:

1. The Flat Pack-IC shape may differ by models. Use an appropriate hot-air flat pack-IC desoldering machine, whose shape matches that of the Flat Pack-IC.
2. Do not supply hot air to the chip parts around the flat pack-IC for over 6 seconds because damage to the chip parts may occur. Put masking tape around the flat pack-IC to protect other parts from damage. (Fig. S-1-2)
3. The flat pack-IC on the CBA is affixed with glue, so be careful not to break or damage the foil of each pin or the solder lands under the IC when removing it.

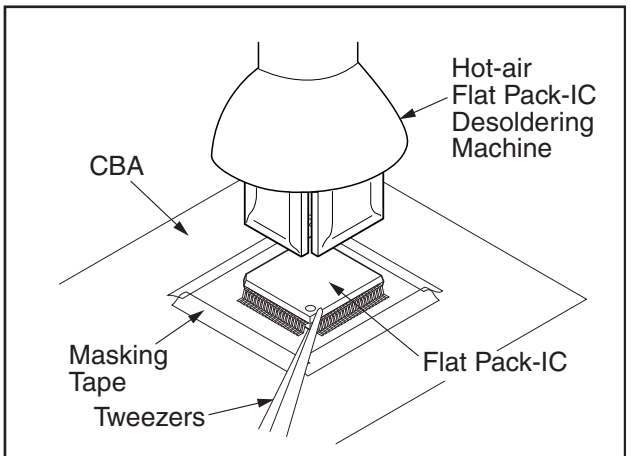

Fig. S-1-2

With Soldering Iron:

1. Using desoldering braid, remove the solder from all pins of the flat pack-IC. When you use solder flux which is applied to all pins of the flat pack-IC, you can remove it easily. (Fig. S-1-3)

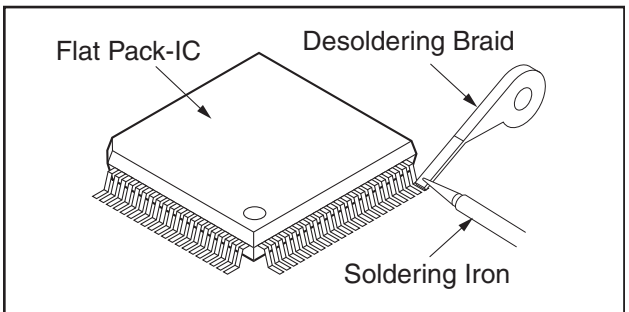

Fig. S-1-3

2. Lift each lead of the flat pack-IC upward one by one, using a sharp pin or wire to which solder will not adhere (iron wire). When heating the pins, use a fine tip soldering iron or a hot air desoldering machine. (Fig. S-1-4)

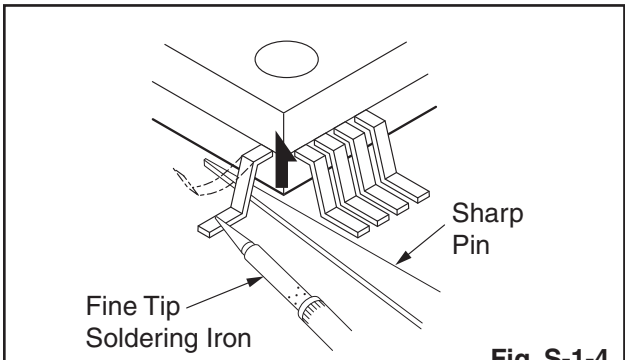

Fig. S-1-4

3. Bottom of the flat pack-IC is fixed with glue to the CBA; when removing entire flat pack-IC, first apply soldering iron to center of the flat pack-IC and heat up. Then remove (glue will be melted). (Fig. S-1-6)
4. Release the flat pack-IC from the CBA using tweezers. (Fig. S-1-6)

With Iron Wire:

1. Using desoldering braid, remove the solder from all pins of the flat pack-IC. When you use solder flux which is applied to all pins of the flat pack-IC, you can remove it easily. (Fig. S-1-3)
2. Affix the wire to a workbench or solid mounting point, as shown in Fig. S-1-5.
3. While heating the pins using a fine tip soldering iron or hot air blower, pull up the wire as the solder melts so as to lift the IC leads from the CBA contact pads as shown in Fig. S-1-5.
4. Bottom of the flat pack-IC is fixed with glue to the CBA; when removing entire flat pack-IC, first apply soldering iron to center of the flat pack-IC and heat up. Then remove (glue will be melted). (Fig. S-1-6)
5. Release the flat pack-IC from the CBA using tweezers. (Fig. S-1-6)

Note: When using a soldering iron, care must be taken to ensure that the flat pack-IC is not being held by glue. When the flat pack-IC is removed from the CBA, handle it gently because it may be damaged if force is applied.

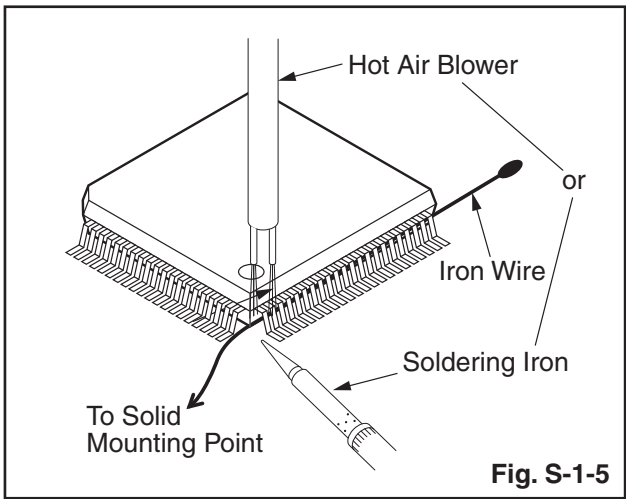

Fig. S-1-5

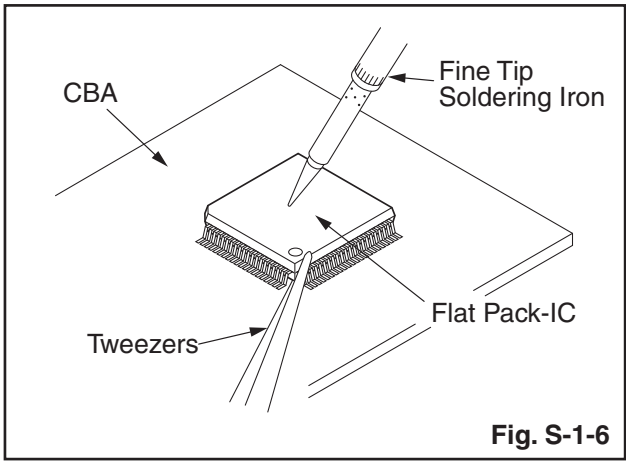

Fig. S-1-6

2. Installation

1. Using desoldering braid, remove the solder from the foil of each pin of the flat pack-IC on the CBA so you can install a replacement flat pack-IC more easily.
2. The "●" mark on the flat pack-IC indicates pin 1. (See Fig. S-1-7.) Be sure this mark matches the pin 1 on the PCB when positioning for installation. Then presolder the four corners of the flat pack-IC. (See Fig. S-1-8.)
3. Solder all pins of the flat pack-IC. Be sure that none of the pins have solder bridges.

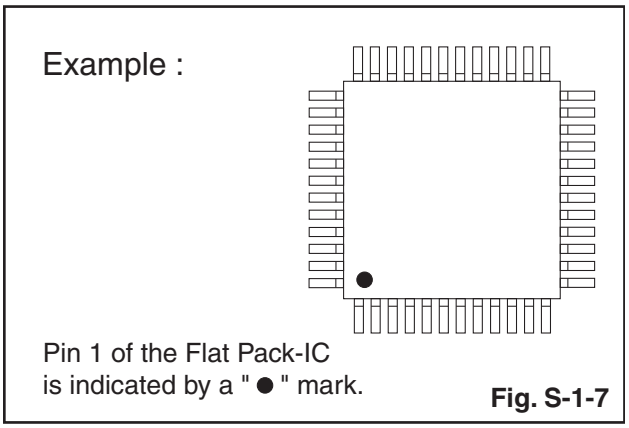

Fig. S-1-7

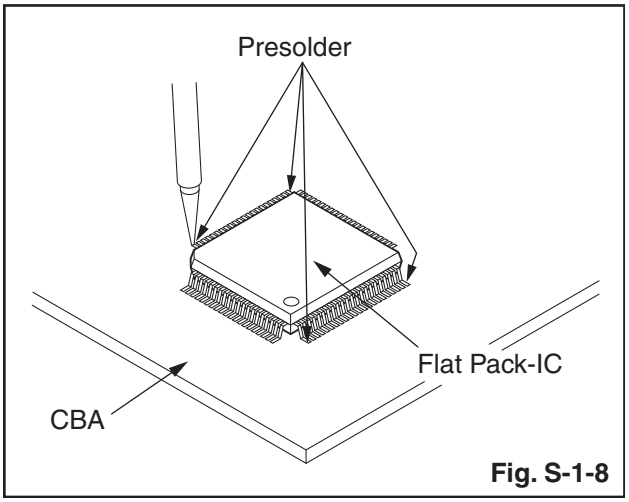

Fig. S-1-8

Instructions for Handling Semi-conductors

Electrostatic breakdown of the semi-conductors may occur due to a potential difference caused by electrostatic charge during unpacking or repair work.

1. Ground for Human Body

Be sure to wear a grounding band (1 MΩ) that is properly grounded to remove any static electricity that may be charged on the body.

2. Ground for Workbench

Be sure to place a conductive sheet or copper plate with proper grounding (1 MΩ) on the workbench or other surface, where the semi-conductors are to be placed. Because the static electricity charge on clothing will not escape through the body grounding band, be careful to avoid contacting semi-conductors with your clothing.

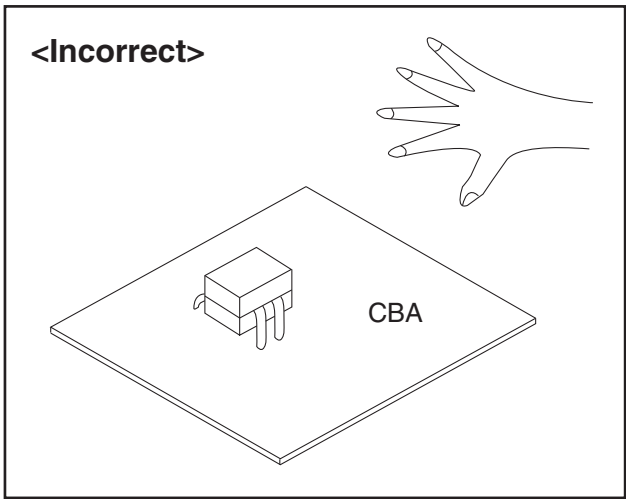

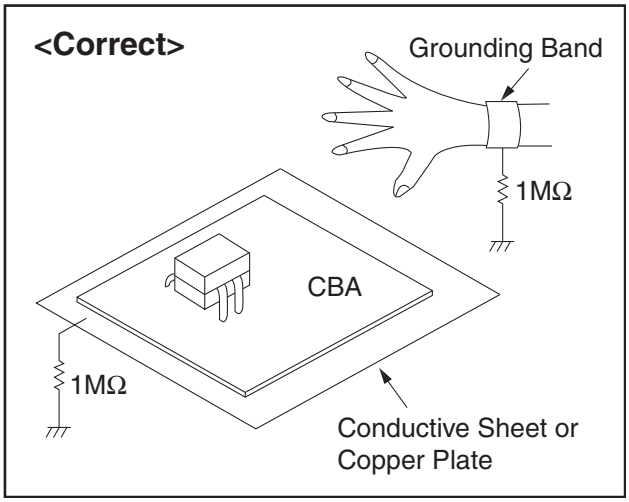

CABINET DISASSEMBLY INSTRUCTIONS

1. Disassembly Flowchart

This flowchart indicates the disassembly steps for the cabinet parts and the CBA in order to gain access to items to be serviced. When reassembling, follow the steps in reverse order. Bend, route and dress the cables as they were.

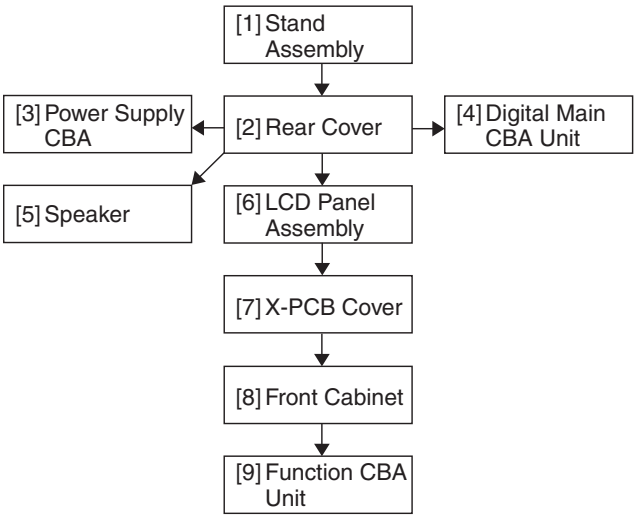

2. Disassembly Method

Step/ Loc. No.	Part	Fig. No.	Removal	Note
[1]	Stand Assembly	D1	3(S-1)	---
[2]	Rear Cover	D1	8(S-2), 4(S-3), (S-4)	---
[3]	Power Supply CBA	D2 D5	4(S-5), CN101, CN102, CN103, CN104, CN105	---
[4]	Digital Main CBA Unit	D2 D5	4(S-6), CN7, CN18, CN12, Jack Holder	---
[5]	Speaker	D3	----------	---
[6]	LCD Panel Assembly	D3	----------	---
[7]	X-PCB Cover	D4	2(S-7)	1
[8]	Front Cabinet	D4	4(S-8)	2
[9]	Function CBA Unit	D4	Sensor Lens, Shield Plate, Control Plate	2
↓ (1)	↓ (2)	↓ (3)	↓ (4)	↓ (5)

Note:

(1) Order of steps in procedure. When reassembling, follow the steps in reverse order. These numbers are also used as the Identification (location) No. of parts in figures.

(2) Parts to be removed or installed.

(3) Fig. No. showing procedure of part location

(4) Identification of parts to be removed, unhooked, unlocked, released, unplugged, unclamped, or desoldered.
N = Nut, L = Locking Tab, S = Screw,
H = Hex Screw, CN = Connector
e.g. 2(S-2) = two Screws of (S-2),
2(L-2) = two Locking Tabs of (L-2)

(5) Refer to the following "Reference Notes in the Table."

Important precautions concerning the LCD Panel Assembly:

1. When you disassemble/re-assemble the X-PCB Cover

- Be careful not to break the hooks. If you pull with too much force, the hooks may be damaged.
- When disassembling, first hold the top and bottom of the X-PCB Cover on both ends and then moving toward the center, lift up the top side to detach the hooks.
- When assembling, be careful not to damage the X-PCB Board or the COF(Chip On Film).
- Make sure the hooks are securely in place when re-assembling.
- The screw tightening torque must be 6kgf·cm (5.2lb·in).

2. When you disassemble/re-assemble the Front Cabinet or Function CBA Unit

- Be careful not to break the hooks. If you pull with too much force, the hooks may be damaged.
- When disassembling, first detach the hooks on each end on the bottom side, then detach the remaining hooks moving toward the center.
- Make sure the hooks are securely in place when assembling.
- Be careful not to scratch the display panel when assembling.
- The Function CBA Unit and Sensor Lens are fixed in place by the hooks. Make sure these hooks are not damaged. Make sure the Function CBA Unit and Sensor Lens are securely in place when re-assembling.
- The screw tightening torque must be 6kgf·cm (5.2lb·in).
- After replacing the Front Cabinet or Function CBA Unit, make sure the tact switches operate normally.
- Make sure to replace the Control Plate to a new one when replacing the Front Cabinet.

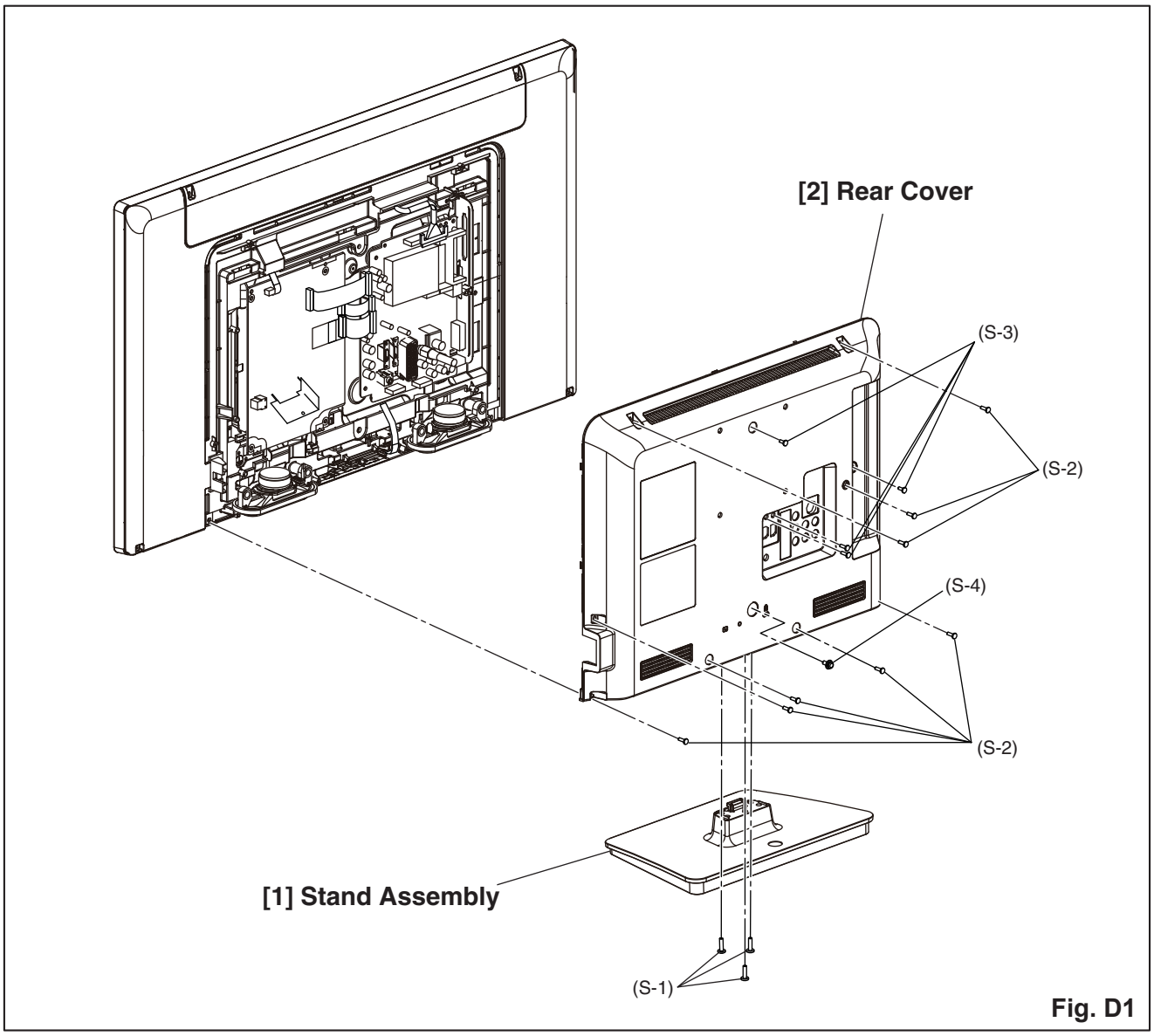

Fig. D1

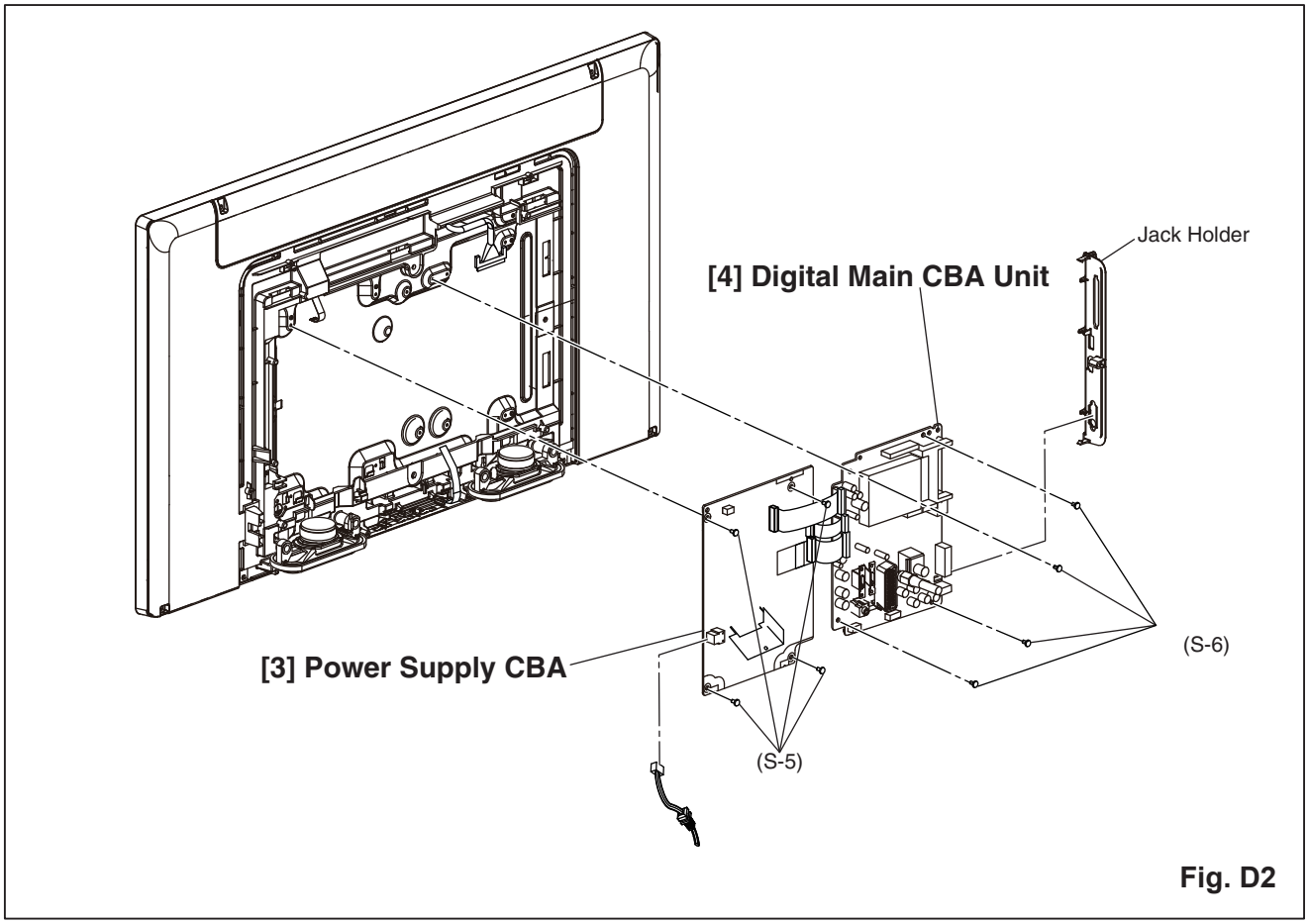
Jack Holder
[4] Digital Main CBA Unit
[3] Power Supply CBA
(S-6)
(S-5)

Fig. D2

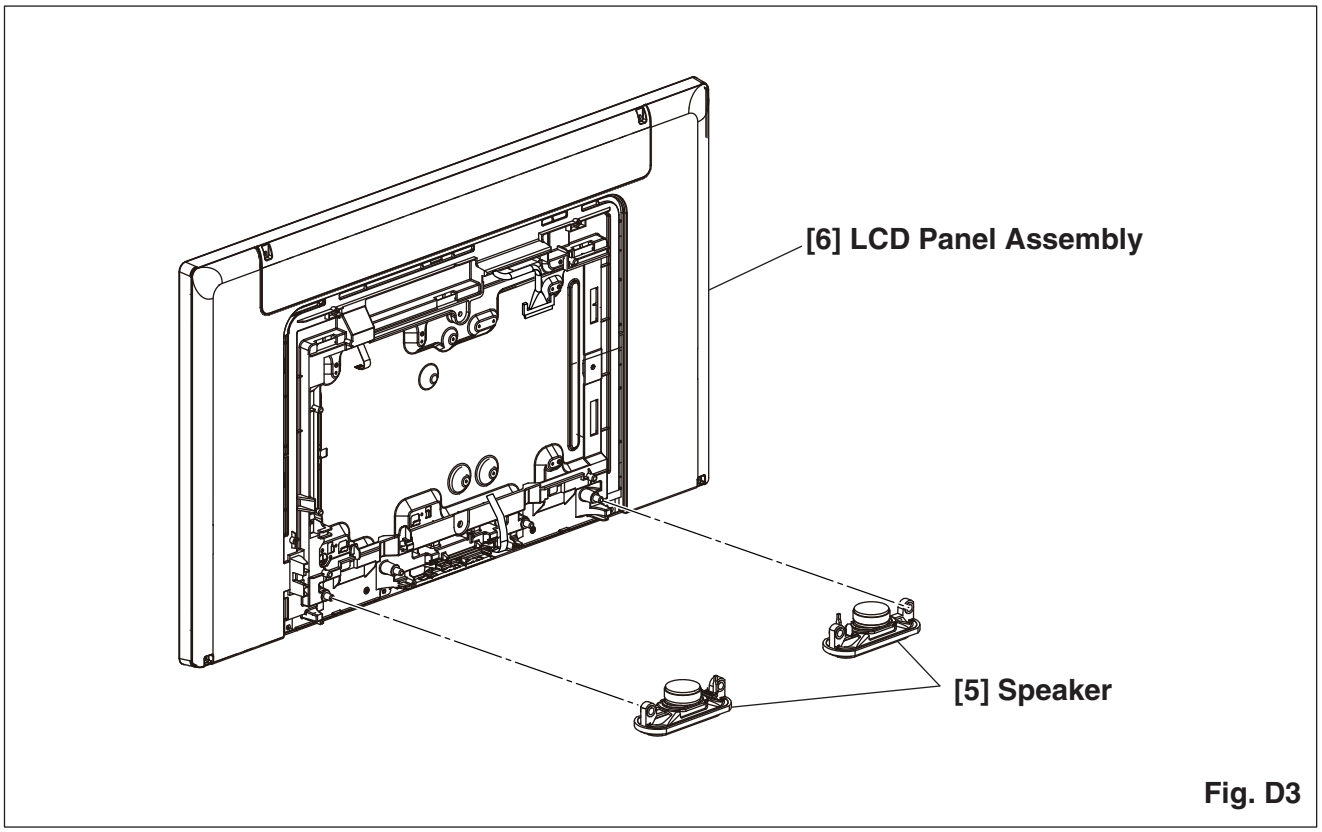
[6] LCD Panel Assembly
[5] Speaker

Fig. D3

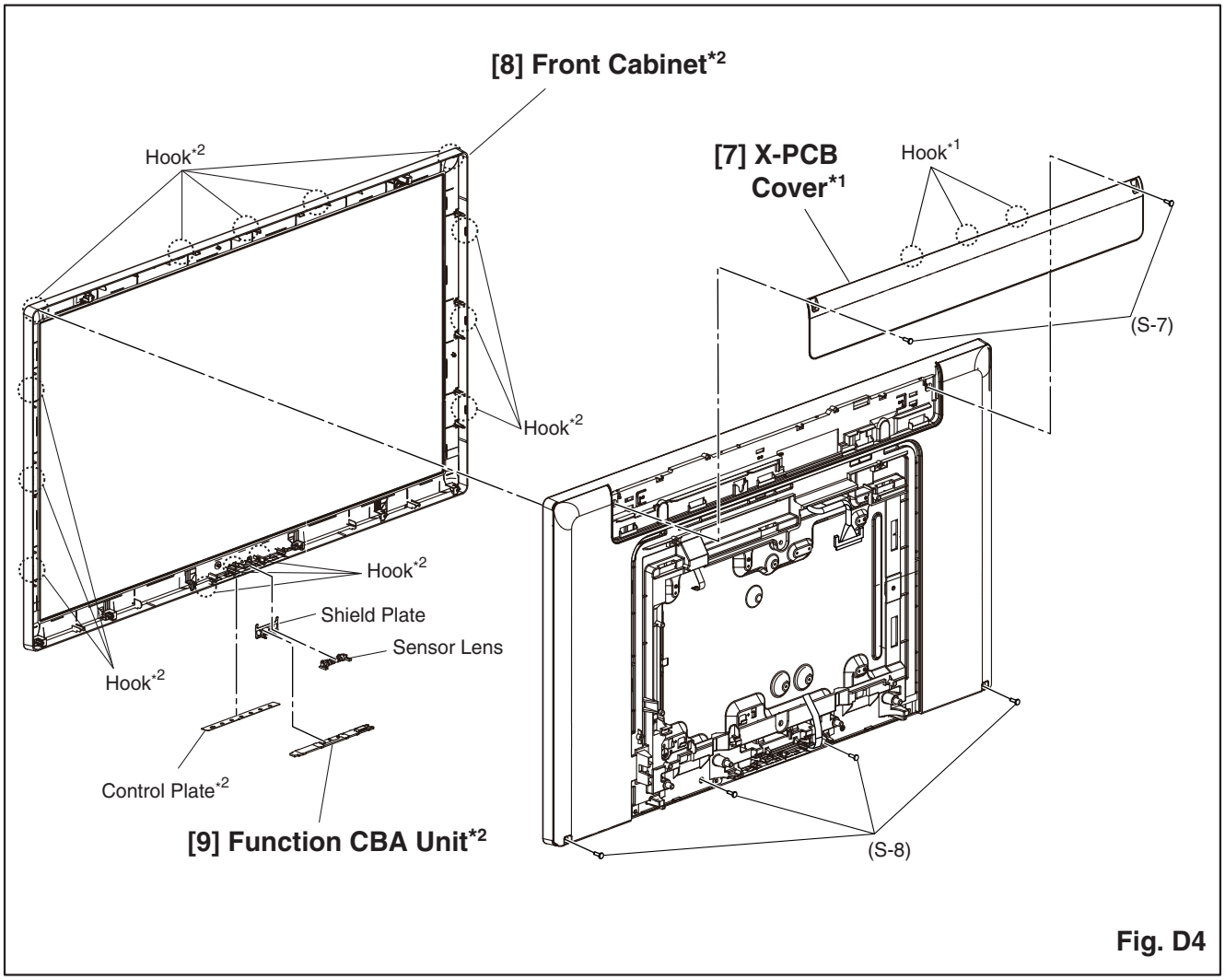

Fig. D4

***1: Make sure to read all the precautions on page 4-1 when you disassemble/re-assemble the X-PCB Cover.**

***2: Make sure to read all the precautions on page 4-1 when you disassemble/re-assemble the Front Cabinet or Function CBA Unit.**

TV Cable Wiring Diagram

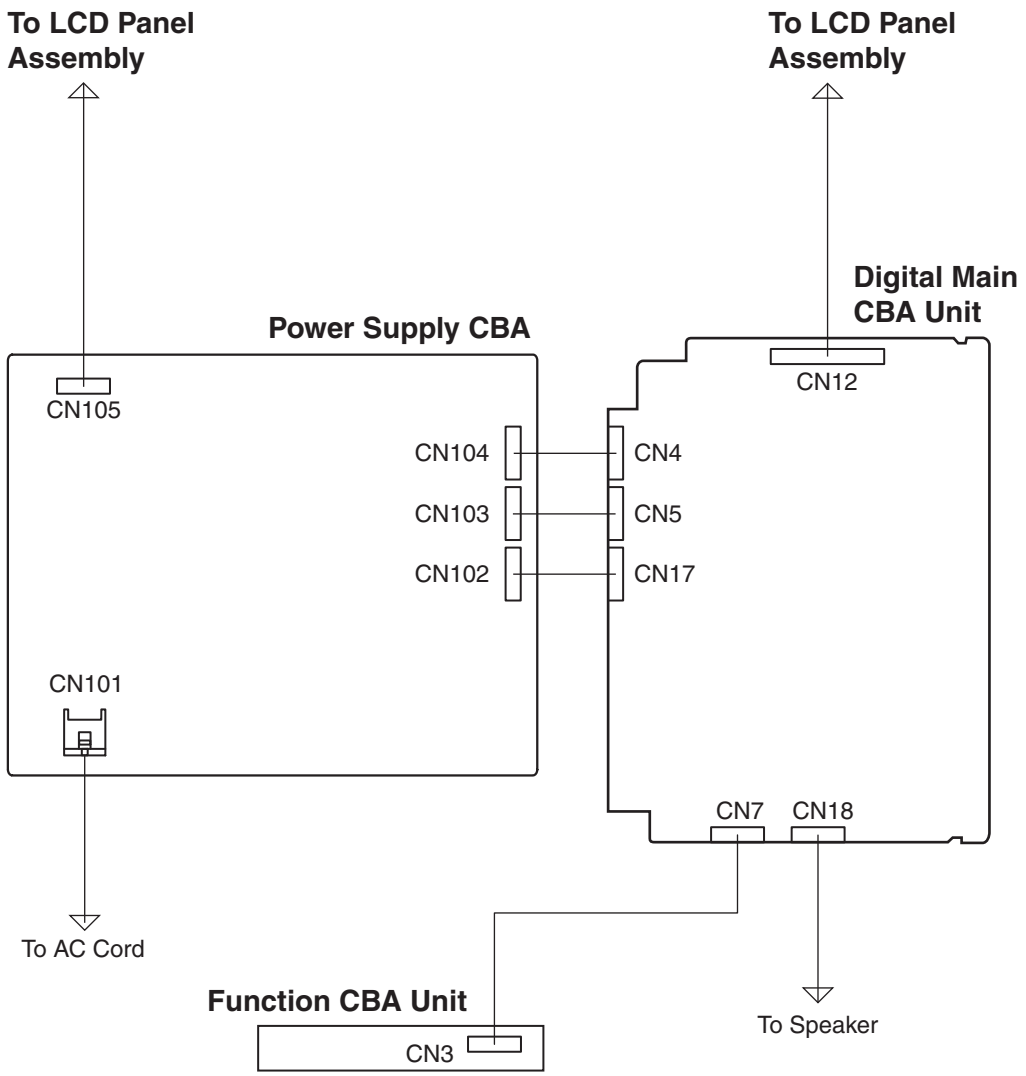

Fig. D5

ELECTRICAL ADJUSTMENT INSTRUCTIONS

General Note: “CBA” is abbreviation for “Circuit Board Assembly.”

Note: Electrical adjustments are required after replacing circuit components and certain mechanical parts. It is important to perform these adjustments only after all repairs and replacements have been completed.
Also, do not attempt these adjustments unless the proper equipment is available.

Test Equipment Required

1. Remote control unit
2. Color Analyzer,
   CA-310 (KONICA MINOLTA Luminance meter) or measuring instrument as good as CA-310.

How to set up the service mode:

Service mode:

1. Turn the power on.
2. Press [SOURCE], [2], [5], [8] and [0] buttons on the remote control unit in this order to enter the service mode. The Factory Setting menu appears in the screen.

Example:

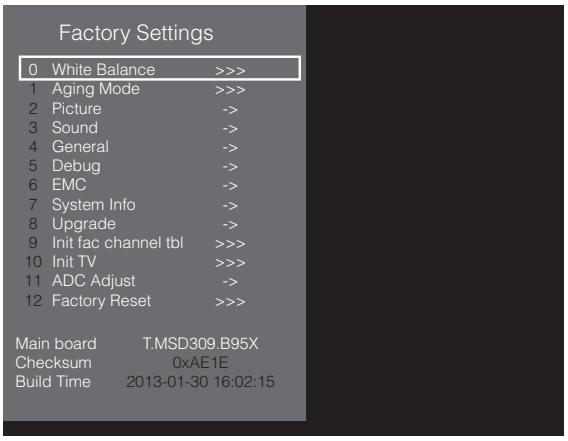

The White Balance Adjustment should be performed when replacing the LCD Panel or Digital Main CBA.

1. White Balance Adjustment

Purpose: To mix red and blue beams correctly for pure white.

Symptom of Misadjustment: White becomes bluish or reddish.

1. Operate the unit for more than 60 minutes.
2. Input the White Raster of composite video signal to AV (70%=70IRE, 40%=40IRE).

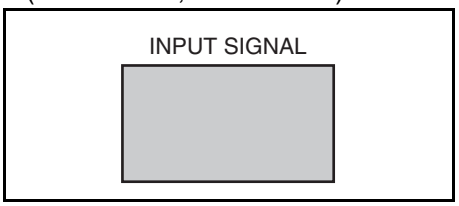

3. Enter the service mode.
4. Press [0] button on the remote control unit to display the “White Balance” menu.

   Additional step:

   A1. Press [2] button on the remote control unit to select the “Colour Temp” menu.

   A2. Press [◀] or [▶] button to select the "Normal".
5. Select a color mode (“3 R-GAIN”, “5 B-GAIN”, “6 R-OFFSET” or “8 B-OFFSET”).
6. Set the color analyzer at the CHROMA mode and zero point calibration. Bring the optical receptor pointing at the center of the LCD-Panel.

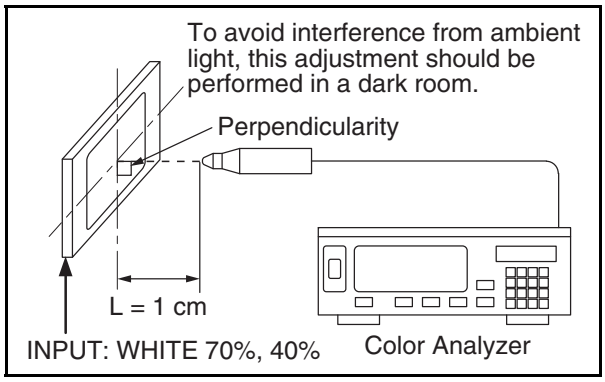

   Note: The optical receptor must be set perpendicularly to the LCD Panel surface.
7. In each color mode, press [◀] or [▶] button to adjust the color temperature becomes 12000°K (x= 0.272 / y= 0.278 ±0.002).
8. To cancel or to exit from the White Balance Adjustment, press [BACK] button.

HOW TO INITIALIZE THE LCD TELEVISION

1. Turn the power on.
2. Enter the service mode. (Refer to page 5-1.)
   - To cancel the service mode, press [BACK] button on the remote control unit.
3. Select “Factory Reset” and [OK] button on the remote control unit.
   The TV set will go off and turn back on automatically when initialization completes.

FIRMWARE RENEWAL MODE

Equipment Required

a. USB storage device
b. Remote Control Unit

Firmware Update Procedure

[Preparation]

1. Prepare USB storage device.
2. Copy F/W-file to USB storage device.
   Note: Make sure to use the blank USB Storage.
3. Make sure that the F/W-file's name is "LC11_308B_FUNAI.bin".

[Update procedure]

1. Turn the power on.
2. Insert USB storage device with F/W to TV set.
3. Press the [MENU] button on the remote control unit to display Menu.
4. Select "SETUP".
5. Select "Software Update (USB)" and press [OK] button.
   The message "Are you sure?" will appear in the screen.
6. Press [LEFT] button to select "YES".
7. Updating starts.

   Note: Do not turn off the TV set and do not remove the USB storage device while this procedure.
8. The TV set will go off and turn back on automatically when update completes.

   Additional step:

   A1. Enter the service mode.

   A2. Select "Init TV" and press [OK] button.
   The TV set will go off and go back on automaticaly.

   A3. Adjust the white balance.

[Confirmation of update]

1. Enter the service mode. (Refer to page 5-1.)
2. Check the "Checksum" section.

TROUBLESHOOTING

[Power Supply Section]

FLOW CHART NO.1

The power cannot be turned on.

↓

Is the fuse (F602) normal?

- No → See FLOW CHART No.2 <The fuse blows out.>
- Yes ↓

Is normal state restored when once unplugged power cord is plugged again after several seconds?

- No → Check if there is any leak or short-circuit on the primary circuit component and repair it if defective. (D601, D602, D603, D604, Q601, Q602, Q603, IC602,T601)
- Yes ↓

Is the VLED(+21V) line voltage normal?

- No → Check if there is any leak or short-circuit on the primary circuit component and repair it if defective. (D601, D602, D603, D604, Q601, Q602, Q603, IC602,T601)
- Yes ↓

Check each rectifying circuit of the secondary circuit and repair it if defective.

FLOW CHART NO.2

The fuse blows out.

↓

Check if there is any leak or short-circuit on the primary circuit component and repair it if defective.

Check if there is any leak or short-circuit on the each rectifying circuit component of secondary side and repair it if defective.

↓

Make sure to repair the primary circuit component before replacing the fuse (F602).

FLOW CHART NO.3

When the output voltage fluctuates.

↓

Does the photocoupler circuit on the secondary side operate normally?

- No → Check IC301, IC601, D301, Q301 and their periphery circuit. Repair it if defective.
- Yes ↓

Check IC601, IC602, D605, D606,D608, D609, D610, D612,D613,D615,D616,D618,D622,D623,Q601,Q602, Q603, and their periphery circuit. Repair it if defective.

FLOW CHART NO.4

When buzz sound can be heard in the periphery of power circuit.

↓

Check if there is any short-circuit on the rectifying diode and the circuit in each rectifying circuit of the secondary side. Repair it if defective. (D401, D402, D403, D501, D502, IC501,Q403)

FLOW CHART NO.5

VLED(+21V) is not output.

↓

Is approximately +21V voltage supplied to the cathode of D501(D502)?

→ No → Check D501, D502, D504,C502, C503, C504 and their periphery circuit. Repair it if defective.

↓ Yes

Check if there is any leak or short-circuit on the load circuit. Repair it if defective.

FLOW CHART NO.6

AMP+13V is not output.

↓

Is approximately +14V voltage supplied to the cathode of D401(D402,D403)?

→ No → Check D401, D402, D403, C402, C403,C407 and their periphery circuit. Repair it if defective.

↓ Yes

Check if there is any leak or short-circuit on the load circuit. Repair it if defective.

FLOW CHART NO.7

+5V(PANEL+5V) is not output.

↓

Is approximately +21V voltage supplied to PIN(8) of IC501?

→ No → See FLOW CHART NO.5 <VLED(+21V) is not output. [Power Supply Section]>

↓ Yes

Check D507,IC501and their periphery circuit. Repair it if defective.

FLOW CHART NO.8

STB+5V is not output.

↓

Is approximately +14V voltage supplied to Drain of Q403?

→ No → See FLOW CHART NO.6 <AMP+13V is not output. [Power Supply Section]>

↓ Yes → Check R410,R416,R417,R430,R431 and their periphery circuit. Repair it if defective.

↓ Yes

Check IC402,Q403 and their periphery circuit. Repair it if defective.

FLOW CHART NO.9

+12V is not output.

↓

Is approximately +15V voltage supplied to Drain of Q701?

→ No → See FLOW CHART NO.6 <AMP+13V is not output. [Power Supply Section]>

↓ Yes → Check R710 and their periphery circuit. Repair it if defective.

↓ Yes

Check IC701,Q701,Q702,Q703 and their periphery circuit. Repair it if defective.

[Video Signal Section]

FLOW CHART NO.1

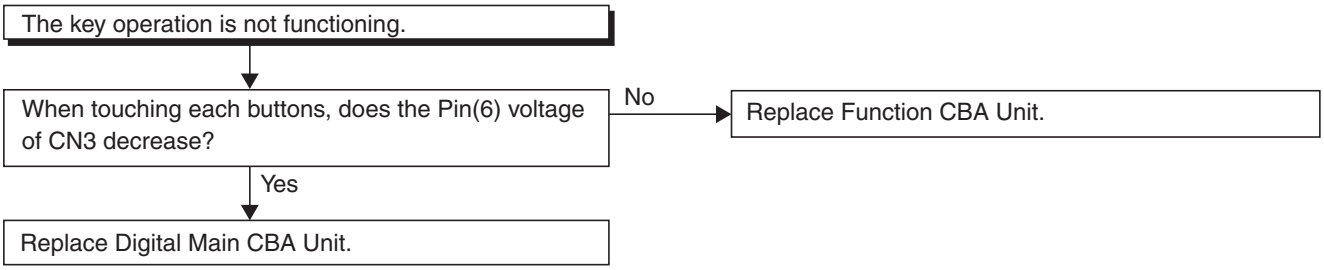

FLOW CHART NO.2

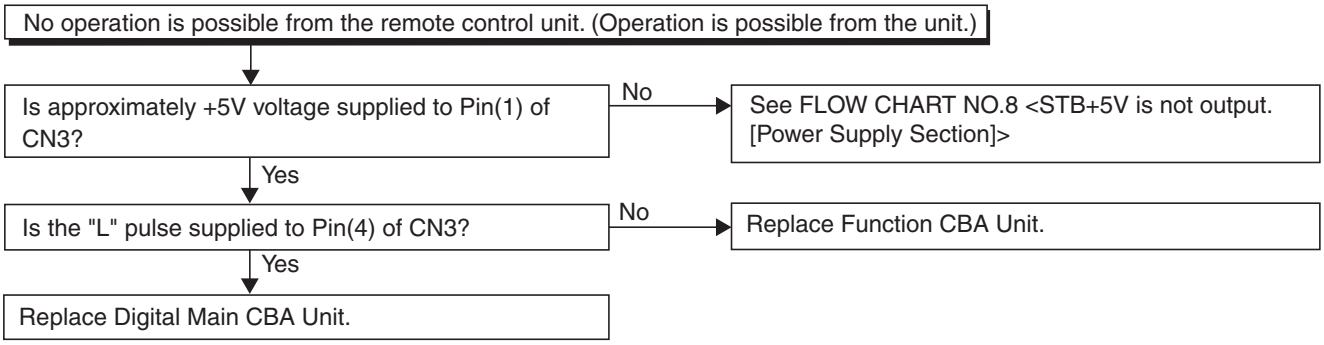

FLOW CHART NO.3

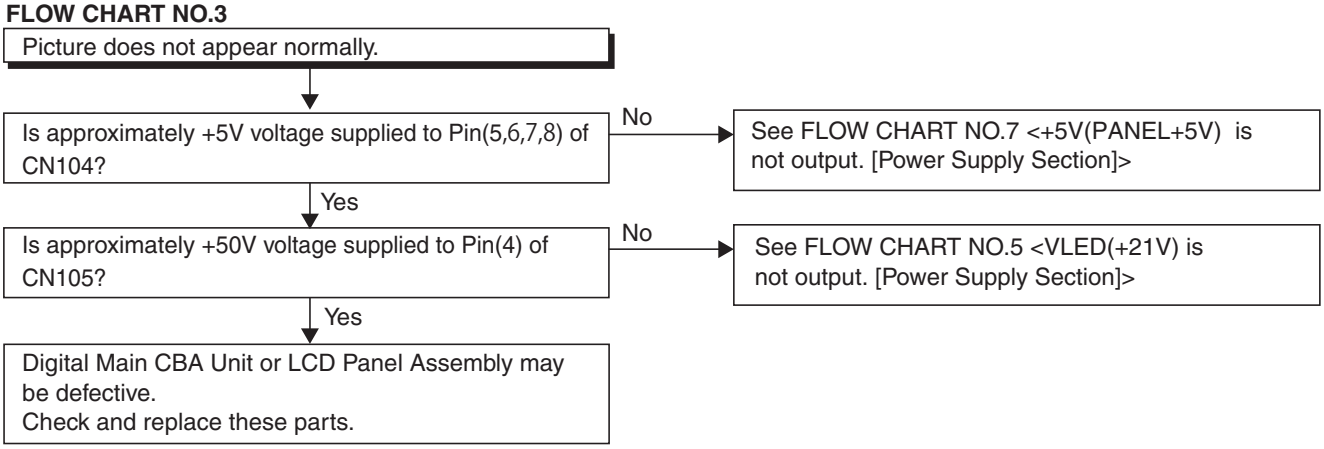

[Audio Signal Section]

FLOW CHART NO.1

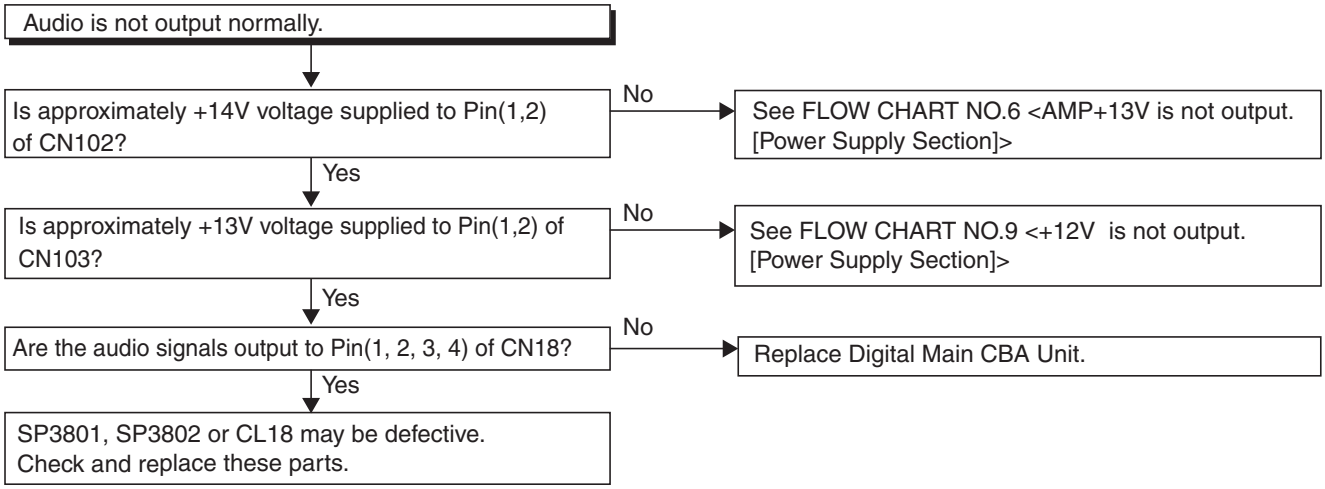

BLOCK DIAGRAMS

System Control Block Diagram

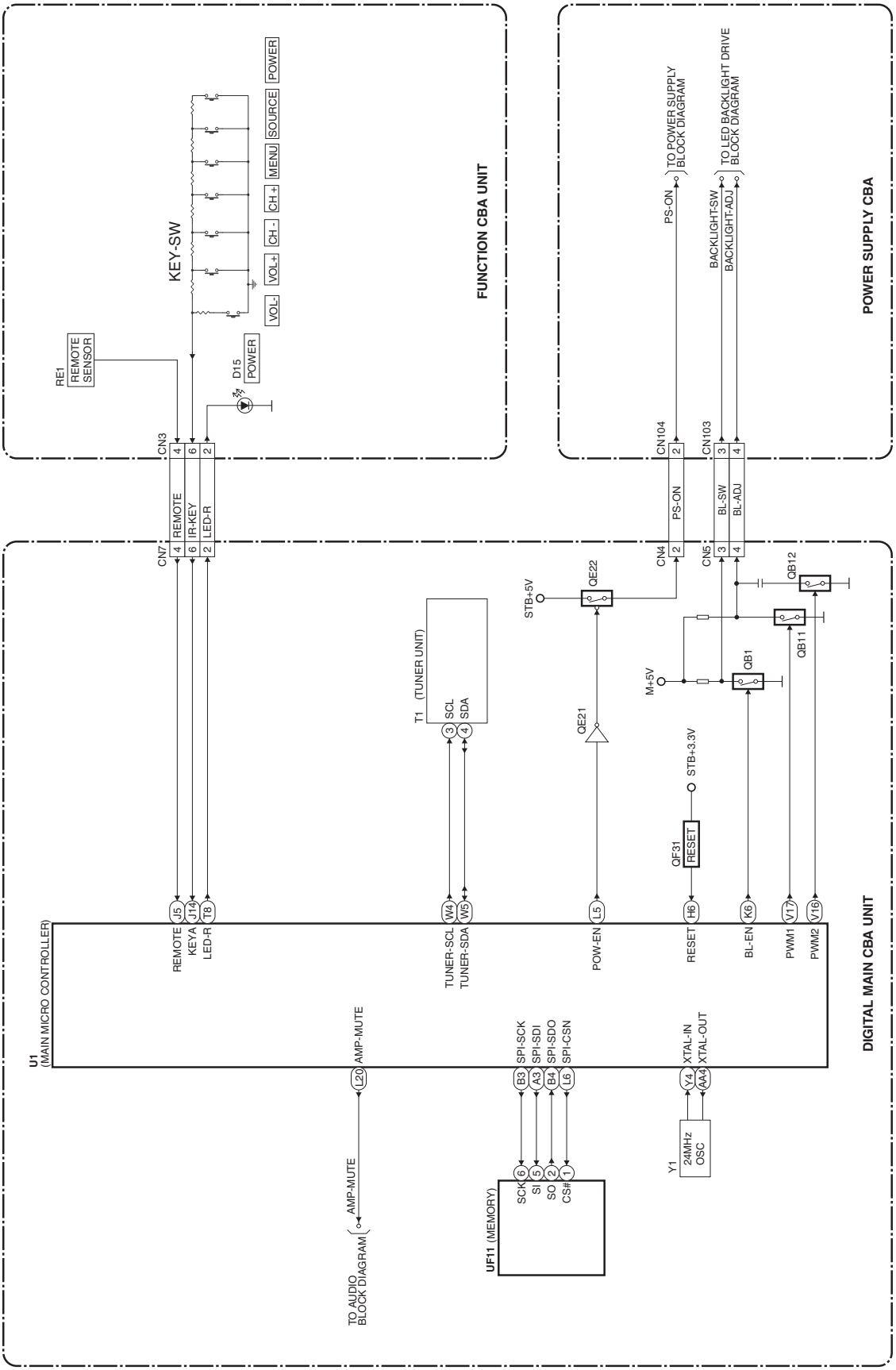

Video Block Diagram

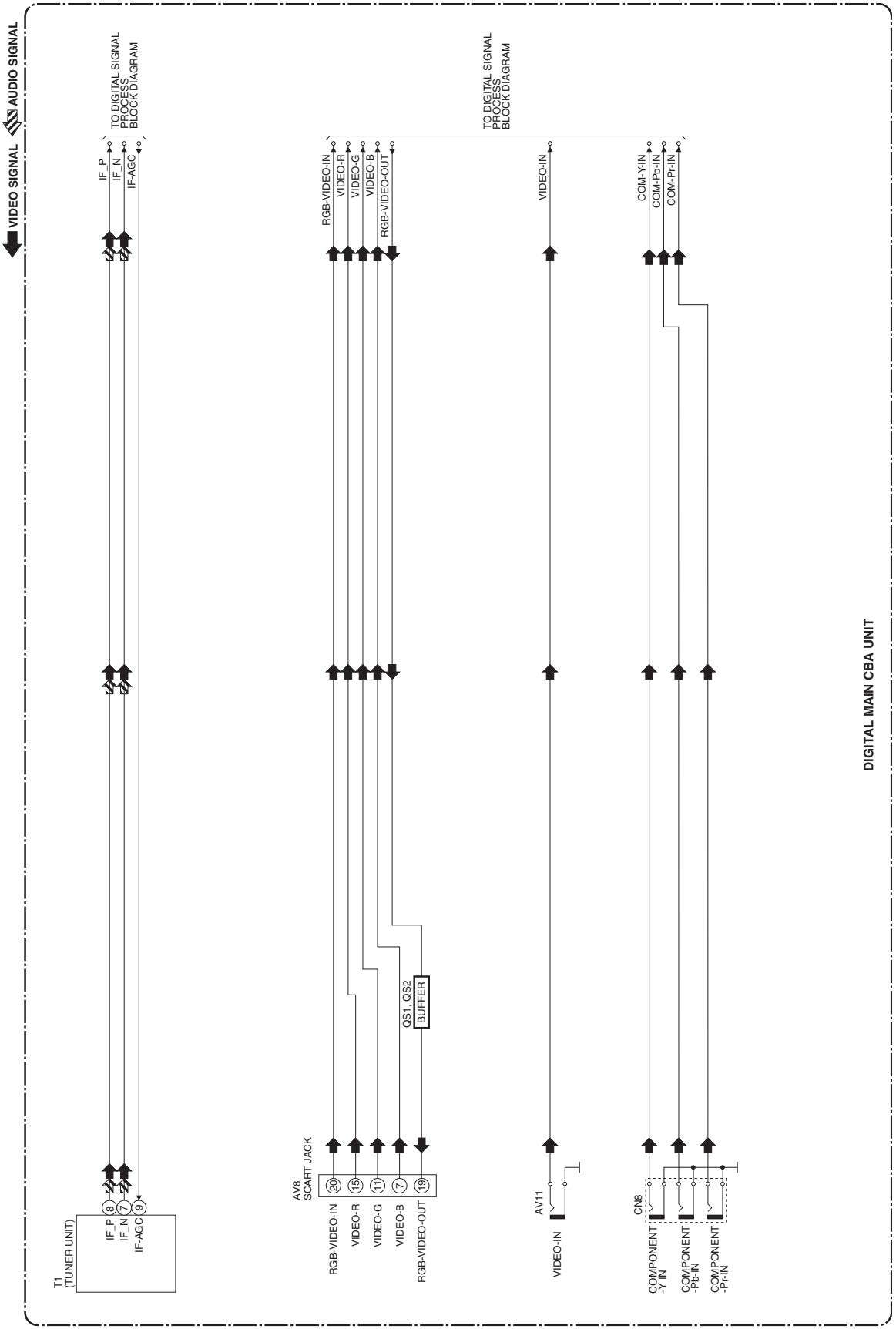

Audio Block Diagram

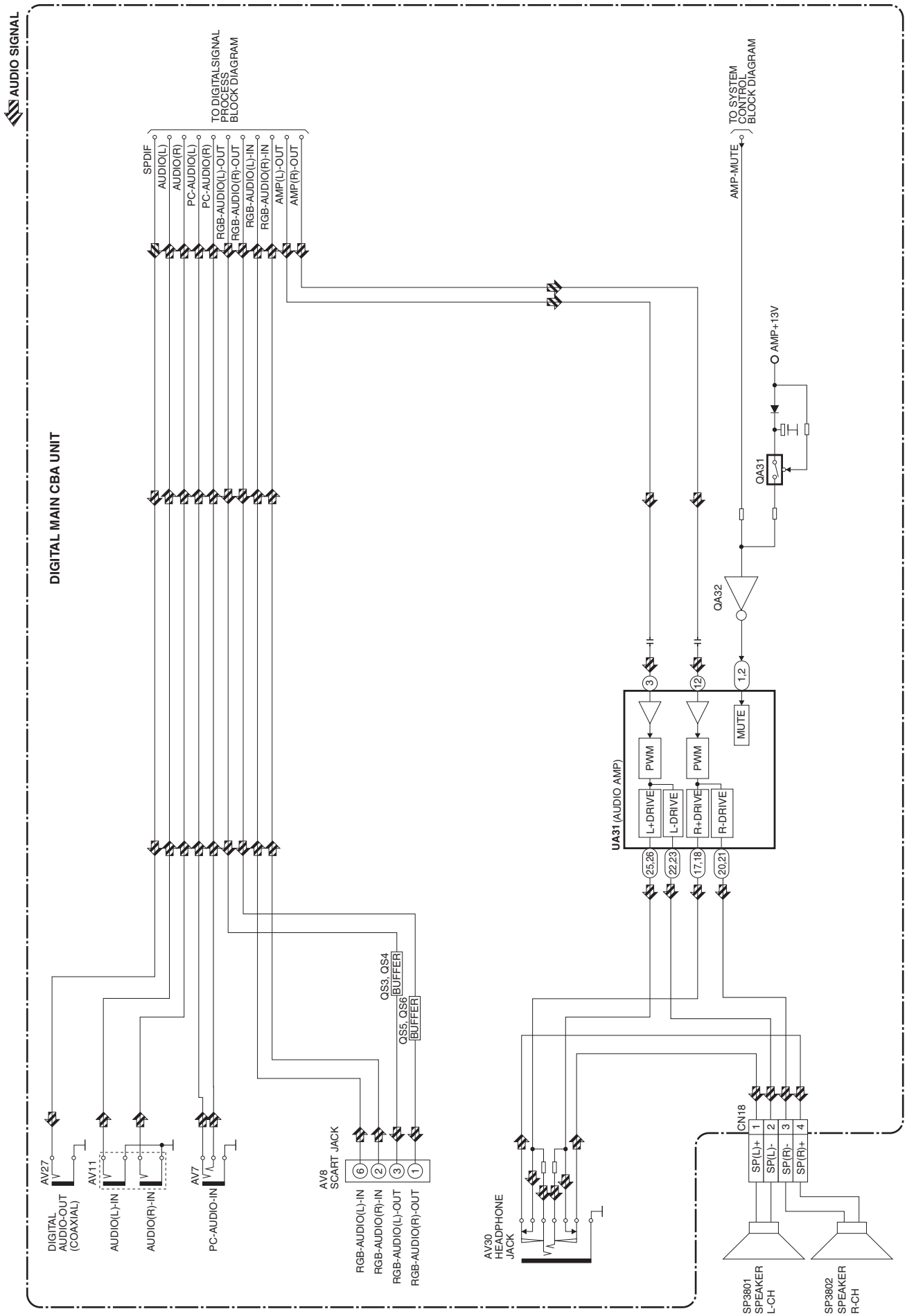

Digital Signal Process Block Diagram

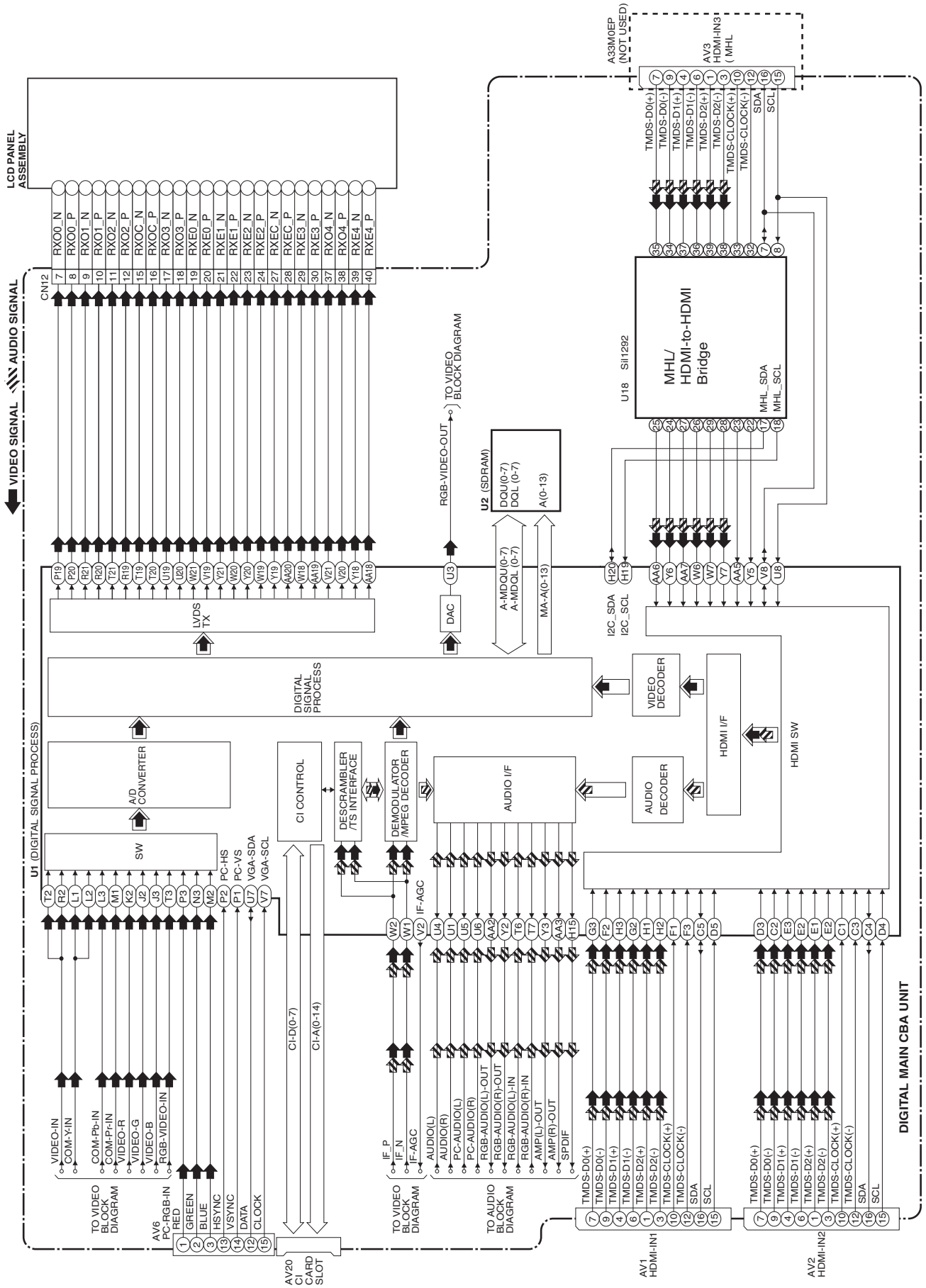

LED Backlight Drive Block Diagram

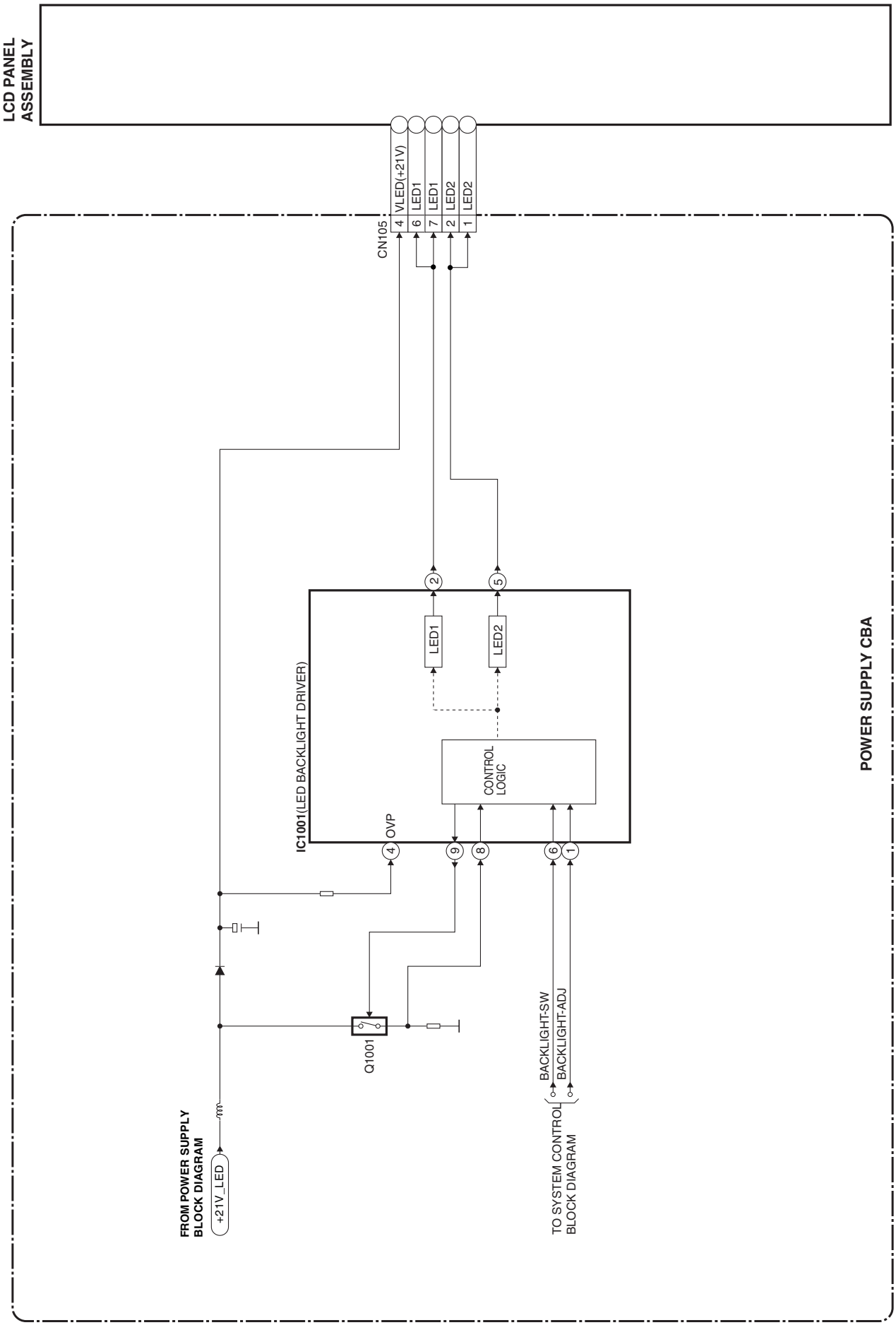

Power Supply Block Diagram

NOTE:
The voltage for parts in hot circuit is measured using hot GND as a common terminal.

CAUTION !
Fixed voltage (or Auto voltage selectable) power supply circuit is used in this unit. If Main Fuse (F602) is blown , check to see that all components in the power supply circuit are not defective before you connect the AC plug to the AC power supply. Otherwise it may cause some components in the power supply circuit to fail.

CAUTION !
For continued protection against fire hazard, replace only with the same type fuse.

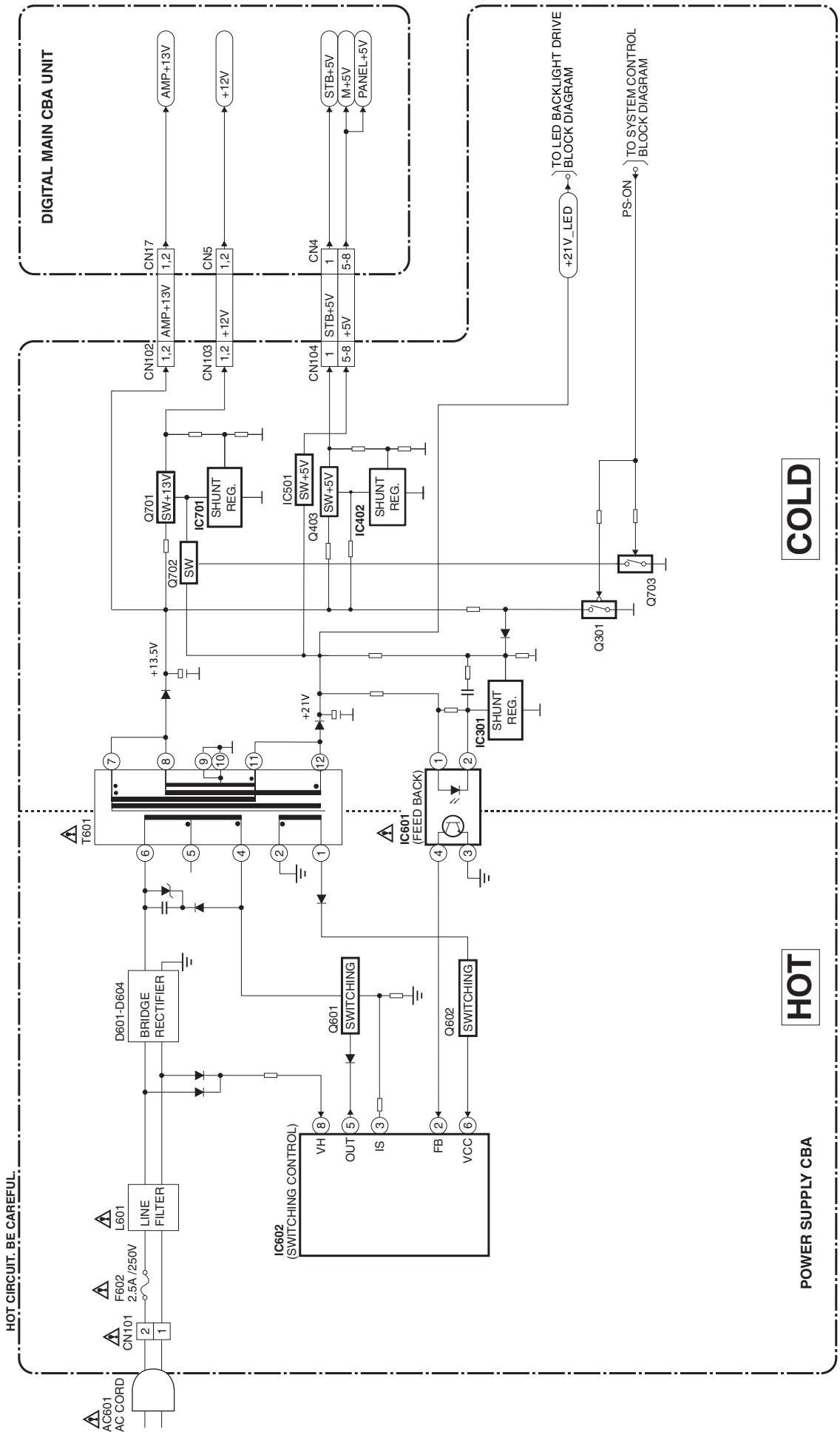

SCHEMATIC DIAGRAMS / CBA AND TEST POINTS

Standard Notes

WARNING

Many electrical and mechanical parts in this chassis have special characteristics. These characteristics often pass unnoticed and the protection afforded by them cannot necessarily be obtained by using replacement components rated for higher voltage, wattage, etc. Replacement parts that have these special safety characteristics are identified in this manual and its supplements; electrical components having such features are identified by the mark "⚠" in the schematic diagram and the parts list. Before replacing any of these components, read the parts list in this manual carefully. The use of substitute replacement parts that do not have the same safety characteristics as specified in the parts list may create shock, fire, or other hazards.

Notes:

1. Do not use the part number shown on these drawings for ordering. The correct part number is shown in the parts list, and may be slightly different or amended since these drawings were prepared.
2. All resistance values are indicated in ohms ($K = 10^3$, $M = 10^6$).
3. Resistor wattages are 1/4W or 1/6W unless otherwise specified.
4. All capacitance values are indicated in μF ($P = 10^{-6}$ μF).
5. All voltages are DC voltages unless otherwise specified.
6. Electrical parts such as capacitors, connectors, diodes, IC's, transistors, resistors, switches, and fuses are identified by four digits. The first two digits are not shown for each component. In each block of the diagram, there is a note such as shown below to indicate these abbreviated two digits.

LIST OF CAUTION, NOTES, AND SYMBOLS USED IN THE SCHEMATIC DIAGRAMS ON THE FOLLOWING PAGES:

1. CAUTION:

FOR CONTINUED PROTECTION AGAINST FIRE HAZARD, REPLACE ONLY WITH THE SAME TYPE FUSE.

2. CAUTION:

Fixed Voltage (or Auto voltage selectable) power supply circuit is used in this unit.

If Main Fuse (F602) is blown, first check to see that all components in the power supply circuit are not defective before you connect the AC plug to the AC power supply. Otherwise it may cause some components in the power supply circuit to fail.

3. Note:

1. Do not use the part number shown on the drawings for ordering. The correct part number is shown in the parts list, and may be slightly different or amended since the drawings were prepared.
2. To maintain original function and reliability of repaired units, use only original replacement parts which are listed with their part numbers in the parts list section of the service manual.

4. Voltage indications on the schematics are as shown below:

Plug the TV power cord into a standard AC outlet.:

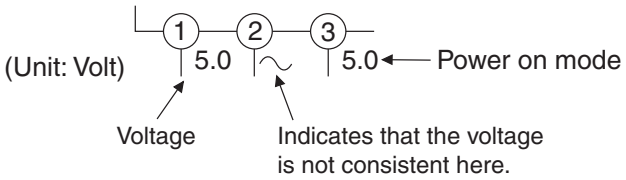

5. How to read converged lines

1-D3

Distinction Area

Line Number (1 to 3 digits)

Examples:

1. "1-D3" means that line number "1" goes to the line number "1" of the area "D3".
2. "1-B1" means that line number "1" goes to the line number "1" of the area "B1".

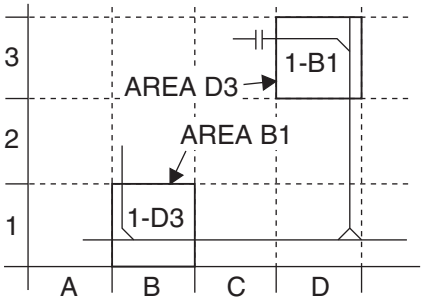

6. Test Point Information

: Indicates a test point with a jumper wire across a hole in the PCB.

: Used to indicate a test point with a component lead on foil side.

: Used to indicate a test point with no test pin.

: Used to indicate a test point with a test pin.

The reference number of parts on Schematic Diagrams/CBA can be retrieved by application search function.

Power Supply CBA Schematic Diagram

CAUTION !
For continued protection against fire hazard, replace only with the same type fuse.

CAUTION !
Fixed voltage (or Auto voltage selectable) power supply circuit is used in this unit. If Main Fuse (F602) is blown , check to see that all components in the power supply circuit are not defective before you connect the AC plug to the AC power supply. Otherwise it may cause some components in the power supply circuit to fail.

NOTE:
The voltage for parts in hot circuit is measured using hot GND as a common terminal.

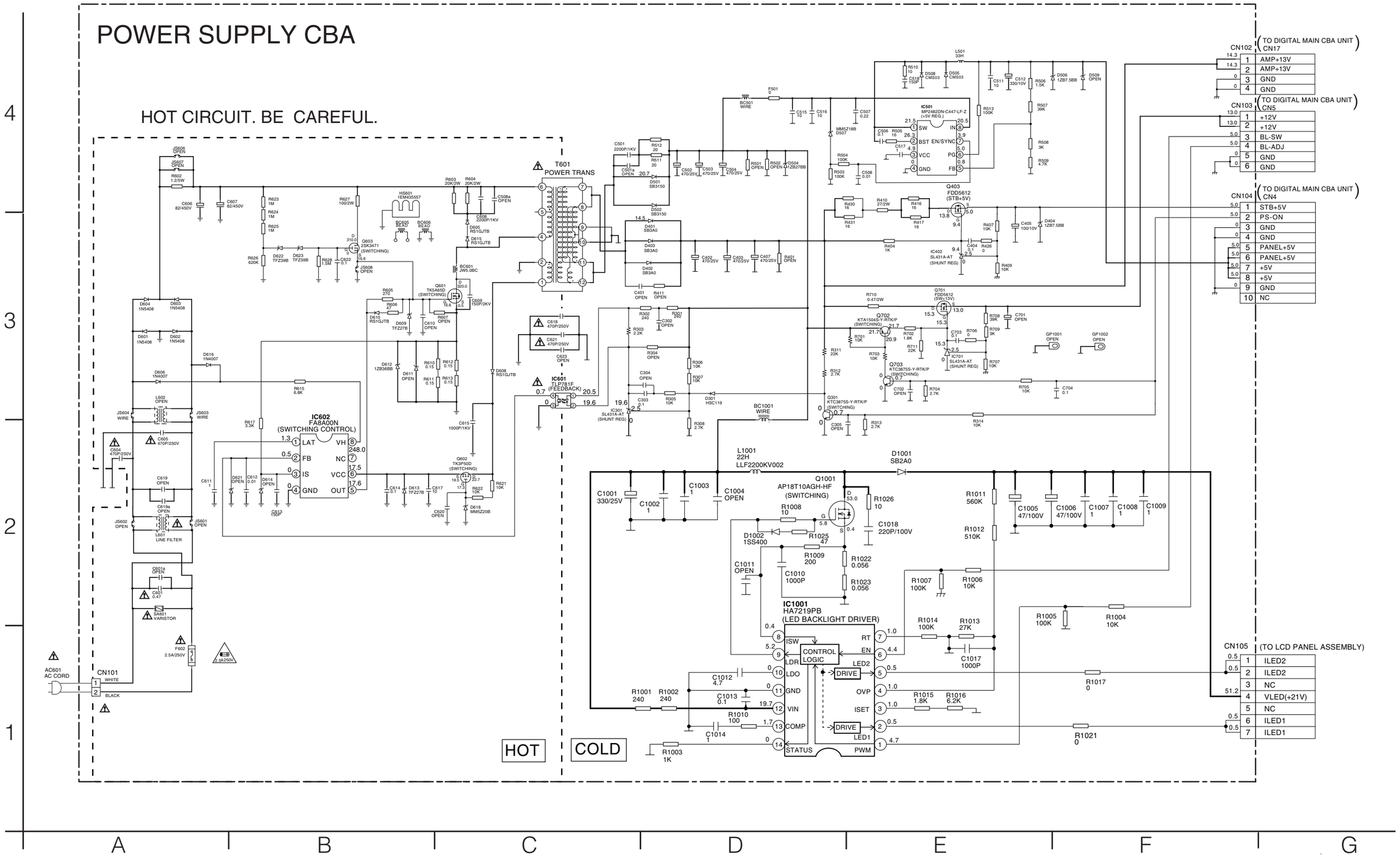

Power Supply CBA Top View

Because a hot chassis ground is present in the power supply circuit, an isolation transformer must be used when repairing. Also, in order to have the ability to increase the input slowly, when troubleshooting this type of power supply circuit, a variable isolation transformer is required.

CAUTION !
Fixed voltage (or Auto voltage selectable) power supply circuit is used in this unit. If Main Fuse (F602) is blown , check to see that all components in the power supply circuit are not defective before you connect the AC plug to the AC power supply. Otherwise it may cause some components in the power supply circuit to fail.

CAUTION !
For continued protection against fire hazard, replace only with the same type fuse.

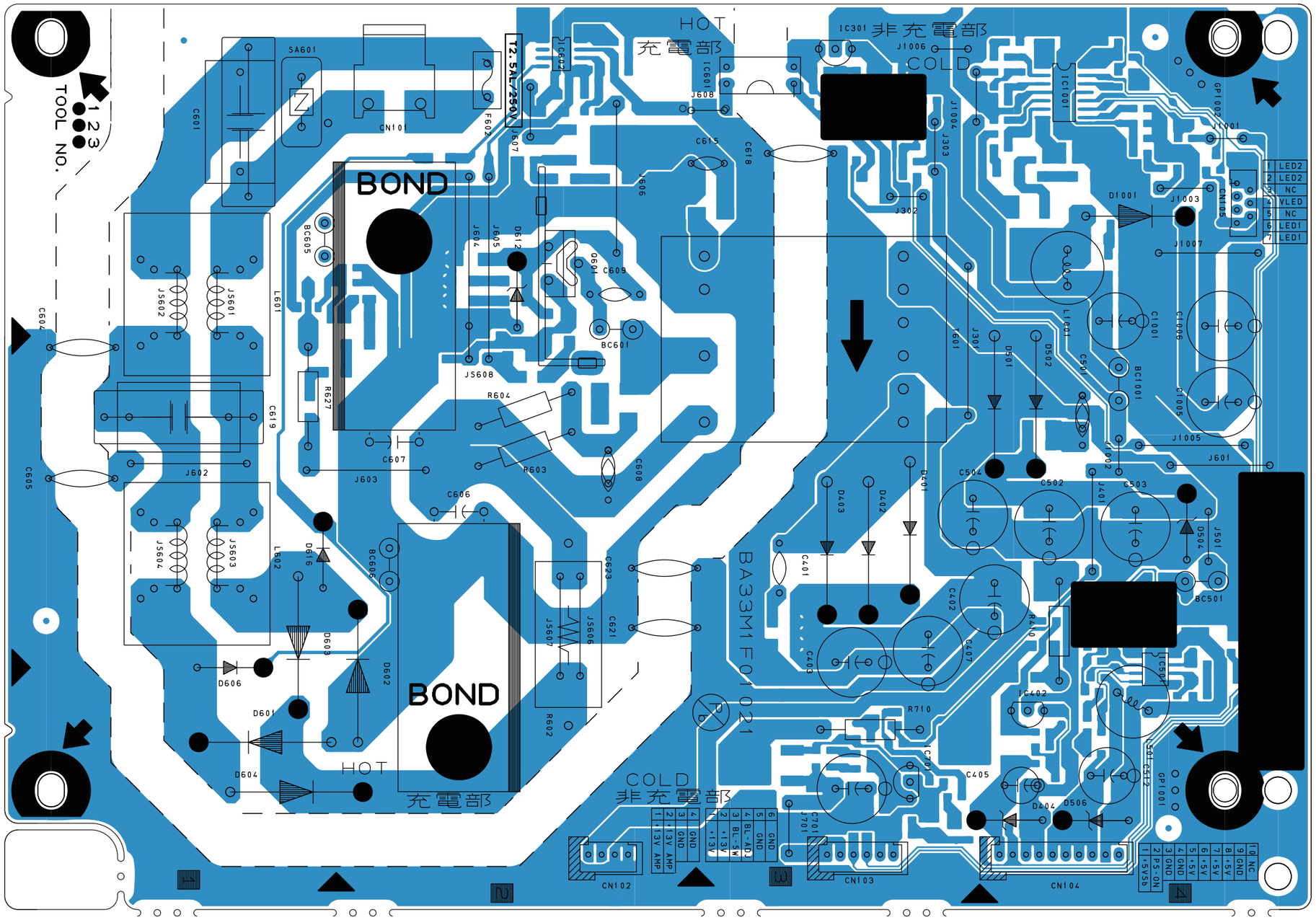

Power Supply CBA Bottom View

Because a hot chassis ground is present in the power supply circuit, an isolation transformer must be used when repairing. Also, in order to have the ability to increase the input slowly, when troubleshooting this type of power supply circuit, a variable isolation transformer is required.

CAUTION !
Fixed voltage (or Auto voltage selectable) power supply circuit is used in this unit. If Main Fuse (F602) is blown , check to see that all components in the power supply circuit are not defective before you connect the AC plug to the AC power supply. Otherwise it may cause some components in the power supply circuit to fail.

CAUTION !
For continued protection against fire hazard, replace only with the same type fuse.

NOTE:
The voltage for parts in hot circuit is measured using hot GND as a common terminal.

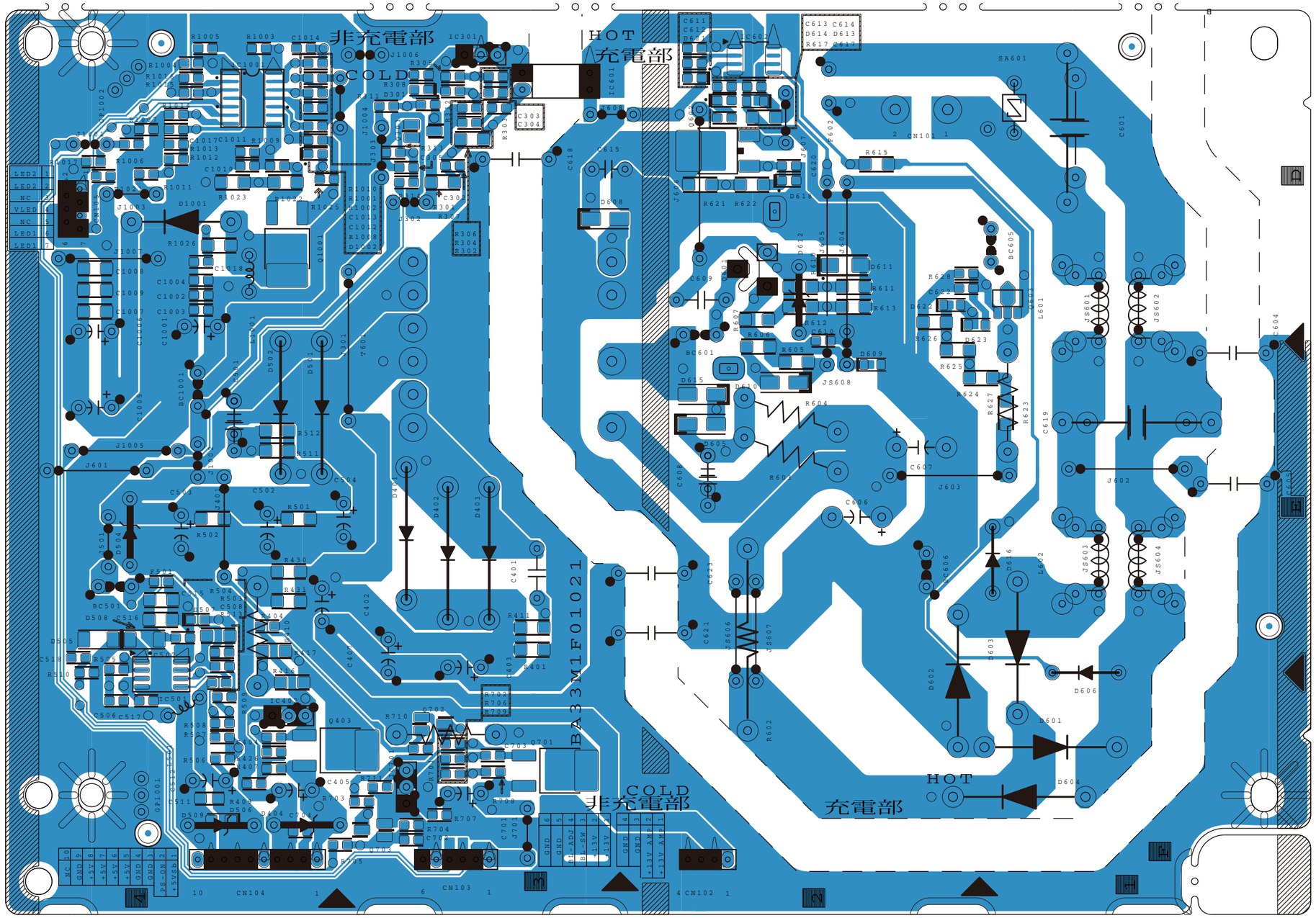

WIRING DIAGRAMS

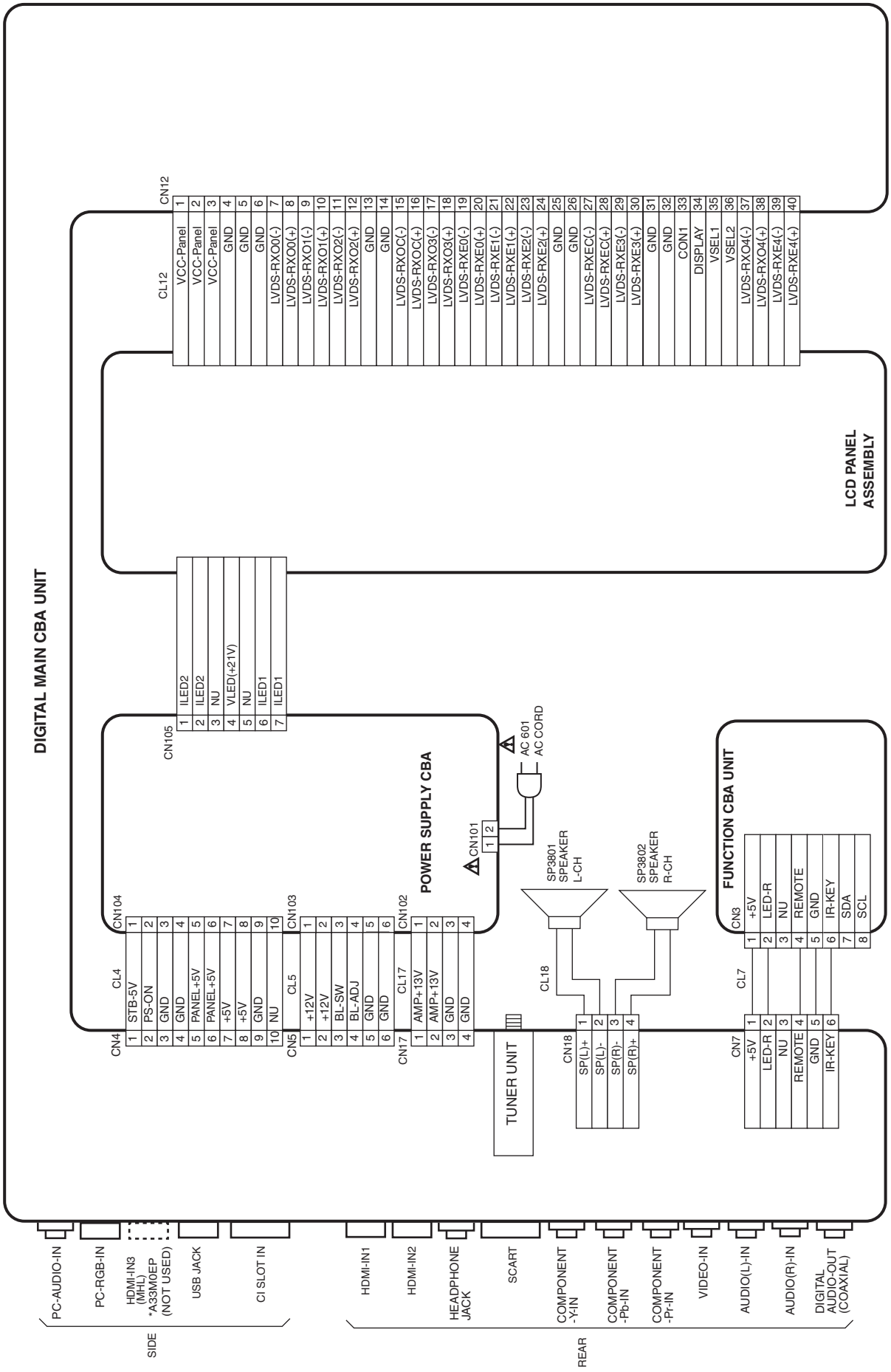

EXPLODED VIEWS

Cabinet

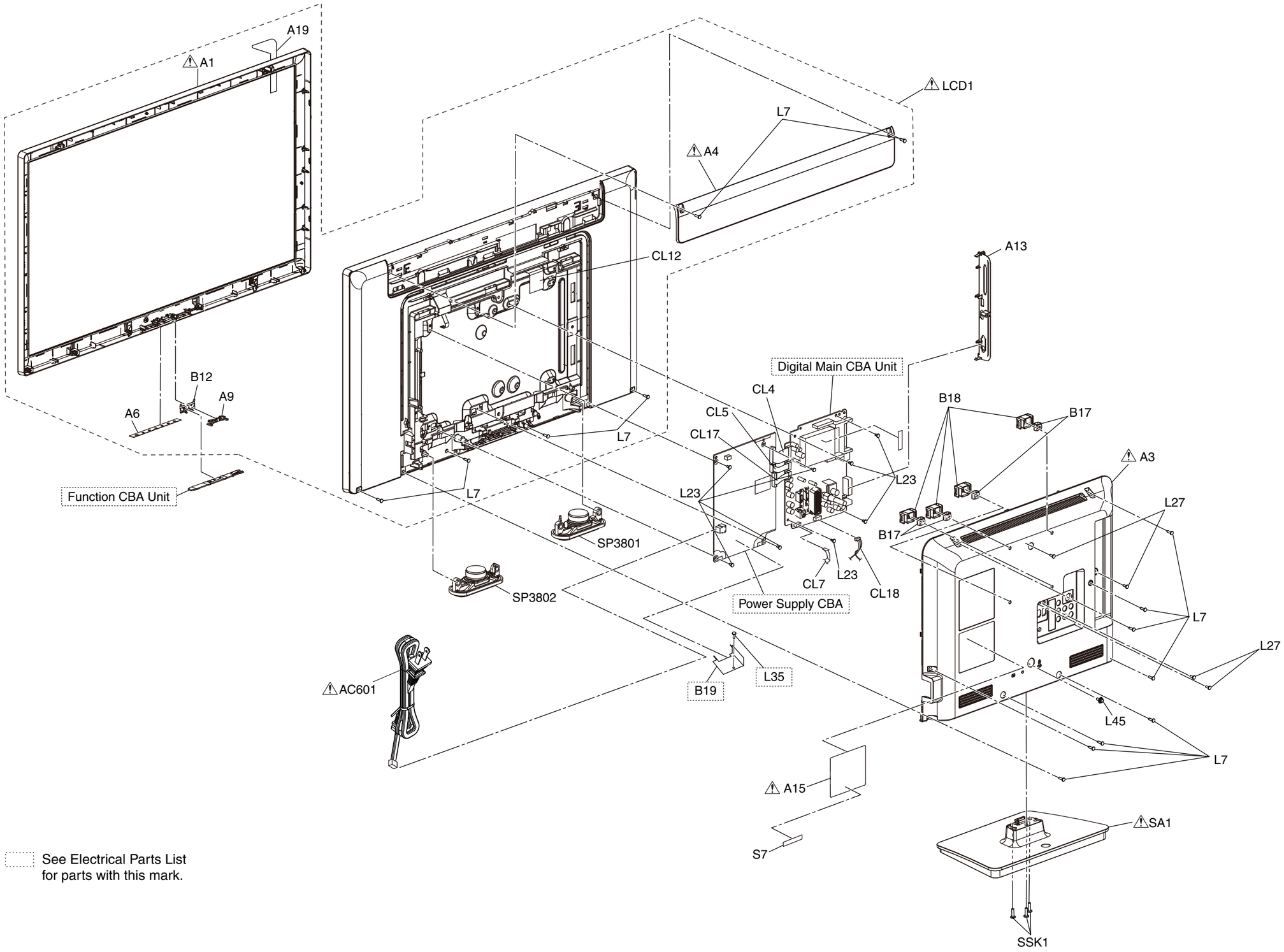

See Electrical Parts List
for parts with this mark.

Packing

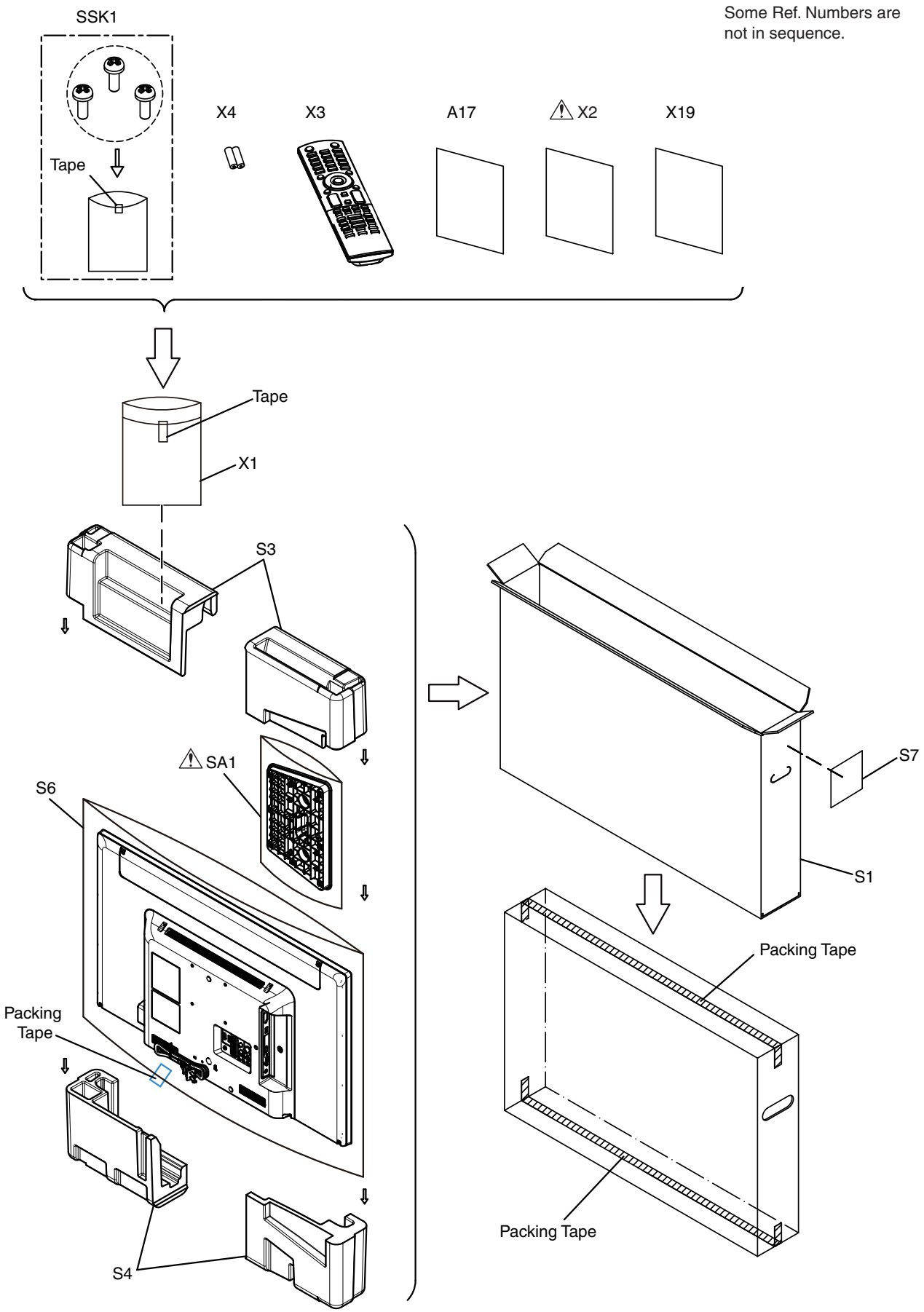
Some Ref. Numbers are not in sequence.
SSK1
Tape
X4
X3
A17
X2
X19
Tape
X1
S3
SA1
S6
Packing Tape
S4
S7
S1
Packing Tape
Packing Tape

MECHANICAL PARTS LIST

PRODUCT SAFETY NOTE: Products marked with a ⚠ have special characteristics important to safety. Before replacing any of these components, read carefully the product safety notice in this service manual. Don't degrade the safety of the product through improper servicing.

NOTE: Parts that are not assigned part numbers (---------) are not available.

Comparison Chart of Models and Marks

Model	Mark
32FL553/10	A
32FL553P/10	B

Ref. No.	Mark	Description	Part No.
X3		REMOTE CONTROL UNIT NH217RD	NH217RD

Ref. No.	Mark	Description	Part No.
A3⚠		REAR COVER A33M1EP	1EM127876
B17		WALL MOUNT BRACKET A11N0UH	1EM434637
B18		WALL MOUNT COVER A2170UT	1EM332137
PACKING			
S6		SET BAG A1AF8UT	1EM334734
SA1⚠		STAND COVER ASSEMBLY A33M1EW	1ESA34388

Ref. No.	Mark	Description	Part No.
A13	A	JACK HOLDER A33T1EP	1EM228243
A13	B	JACK HOLDER(MHL) A33T1EP	1EM228183
A15⚠	A	RATING LABEL A33F0EP	---------
A15⚠	B	RATING LABEL A33F1EP	---------
A19	A	POP LABEL A33M0EP	---------
A19	B	POP LABEL A33M1EP	---------
A17		ENERGY LABEL A33F1EP	---------
AC601⚠		AC CORD W/O A GND WIRE CEE/1700/ NO/BLACK	WAE172ZHN010
CL4		WIRE ASSEMBLY 10PIN CFH1006502	WX1A33F1C301
CL5		WIRE ASSEMBLY 6PIN CFH0606001	WX1A33F1C302
CL7		WIRE ASSEMBLY 5PIN SENSOR CFH0509501	WX1A33F1C107
CL17		WIRE ASSEMBLY 4PIN CFH0406503	WX1A33F1C303
CL18		WIRE ASSEMBLY SP 4PIN CFH0424001	WX1A33F1C204
L7		SCREW P-TIGHT 3X10 BIND HEAD+	GBHP3100
L23		SCREW S-TIGHT M3X6 BIND HEAD+	GBJS3060
L27		SCREW S-TIGHT M3X8 BIND HEAD+	GBHS3080
L45		DOUBLE SEMS SCREW M4X10 + BLK	FPH34100
PACKING			
S1		CARTON A33F1EP	1EM334650
S3		STYROFOAM TOP A33F1EP	1EM030616
S4		STYROFOAM BOTTOM A33F1EP	1EM030617
S7		SERIAL NO. LABEL A33M1EP	---------
SP3801		SPEAKER MAGNETIC 8Ω/8W S0310F14	DS08110XQ002
SP3802		SPEAKER MAGNETIC 8Ω/8W S0310F14	DS08110XQ002
SSK1		STAND SCREW KIT A33M1EP(SCREW P-TIGHT M4X14 BIND HEAD+BLK)	1ESA34766
ACCESSORY			
X1		BAG POLYETHYLENE 235X365XT0.03	0EM408420A
X2⚠		OWNERS MANUAL A33M1EP	1EMN30383
X4		BATTERY DRY R03(SIZE AAA)	XB00M0RKT001
X19		SAFETY AND WARRANTY BOOK A23F0EP	1EMN30040

LCD PANEL ASSEMBLY

Ref. No.	Mark	Description	Part No.
LCD1⚠		LCD PANEL ASSEMBLY	U3FF0FA
		Consists of the following	
A1⚠		FRONT CABINET A33F1EP	1EM127953
A4⚠		X-PCB COVER A31F0UT	1EM030745
A6		CONTROL PLATE A31F0UT	1EM334317
A9		SENSOR LENS A31F0UT	1EM334217
B12		SHIELD PLATE A31F0UT	1EM334218
CL12		LVDS WIRE 32W CFL2627001	WX1A33F1C106
L7		SCREW P-TIGHT 3X10 BIND HEAD+	GBHP3100
		LCD MODULE 32INCH	---------

ELECTRICAL PARTS LIST

PRODUCT SAFETY NOTE: Products marked with a ⚠ have special characteristics important to safety. Before replacing any of these components, read carefully the product safety notice in this service manual. Don't degrade the safety of the product through improper servicing.

NOTES:

1. Parts that are not assigned part numbers (---------) are not available.
2. Tolerance of Capacitors and Resistors are noted with the following symbols.

C.....±0.25%	D.....±0.5%	F.....±1%
G.....±2%	J.....±5%	K.....±10%
M.....±20%	N.....±30%	Z.....+80/-20%

POWER SUPPLY CBA

Ref. No.	Description	Part No.
PWR1	POWER SUPPLY CBA	A33M1MPW-001
	Consists of the following	
	CAPACITORS	
C303	CAP CHIP 1608 K/X7R/0.1μF/50V	CHD104EYA032
C402	CAP ELE 470μF/25V/M/85	CED4710V8006
C403	CAP ELE 470μF/25V/M/85	CED4710V8006
C404	CAP CHIP 1608 K/X7R/0.1μF/50V	CHD104EYA032
C405	CAP ELE 100μF/10V/M/85	CEB1010V8006
C407	CAP ELE 470μF/25V/M/85	CED4710V8006
C501	CERAMIC CAP. 2200pF/1kV	CCD3AKA0R222
C502	ELECTROLYTIC CAP. 470μF/25V M(105C)	CE1EMASTH471
C503	ELECTROLYTIC CAP. 470μF/25V M(105C)	CE1EMASTH471
C504	ELECTROLYTIC CAP. 470μF/25V M(105C)	CE1EMASTH471
C506	CAP CHIP 1608 K/X7R/0.1μF/50V	CHD104EYA032
C507	CHIP CERAMIC CAP.(1608) F Z 0.22μF/50V	CHD1JZ30F224
C508	CHIP CERAMIC CAP.(1608) B K 0.01μF/50V	CHD1JK30B103
C511	CHIP CERAMIC CAP. B K 10μF/10V	CHE1AK30B106
C512	ELECTROLYTIC CAPACITOR 330μF/10V M	CA1A331NC220
C515	CAP CHIP 3216 B K 10μF/25V	CA1E106MR082
C516	CAP CHIP 3216 B K 10μF/25V	CA1E106MR082
C517	CHIP CERAMIC CAP.(1608) B K 1μF/25V	CHD1EK30B105
C518	CHIP CERAMIC CAP. CH J 150pF/50V	CHD1JJ3CH151
C601⚠	CAP METALLIZED FILM 0.47μF/250V/K/MPX	CTA474EUR001
C604⚠	CAP CERAMIC 470pF/250V KX	CA2E471MR100
C605⚠	CAP CERAMIC 470pF/250V KX	CA2E471MR100
C606	CAP ELE 82μF/450V/M/105	CV9E820M02W1
C607	CAP ELE 82μF/450V/M/105	CV9E820M02W1
C608	CERAMIC CAP. 2200pF/1kV	CCD3AKA0R222
C609	CERAMIC CAP. 150pF/2kV	CA3D151PAN04
C611	CHIP CERAMIC CAP.(1608) B K 1μF/25V	CHD1EK30B105
C612	CHIP CERAMIC CAP.(1608) B K 1000pF/50V	CHD1JK30B102
C613	CHIP CERAMIC CAP. CH J 150pF/50V	CHD1JJ3CH151
C614	CAP CHIP 1608 K/X7R/0.1μF/50V	CHD104EYA032
C615	CAP CERAMIC HV 1000pF/1kV B K	CA3A102TE006
C617	CAP CHIP 3216 B K 10μF/25V	CA1E106MR082
C618⚠	CAP CERAMIC 470pF/250V KX	CA2E471MR100
C621⚠	CAP CERAMIC 470pF/250V KX	CA2E471MR100
C622	CAP CHIP 1608 K/X7R/0.1μF/50V	CHD104EYA032
C703	CAP CHIP 1608 K/X7R/0.1μF/50V	CHD104EYA032
C704	CAP CHIP 1608 K/X7R/0.1μF/50V	CHD104EYA032
C1001	CAP ELECTROLYTIC 330μF/25V M/105	CE1EMASTH331
C1002	CHIP CERAMIC CAP.(1608) B K 1μF/25V	CHD1EK30B105
C1003	CHIP CERAMIC CAP.(1608) B K 1μF/25V	CHD1EK30B105
C1005	ELECTROLYTIC CAP SK100M470YZZP50R	CE2AMASTH470
C1006	ELECTROLYTIC CAP SK100M470YZZP50R	CE2AMASTH470
C1007	CHIP CERAMIC CAP.(3216) X7R K 1.0μF/100V	CA2A105MR080
C1008	CHIP CERAMIC CAP.(3216) X7R K 1.0μF/100V	CA2A105MR080
C1009	CHIP CERAMIC CAP.(3216) X7R K 1.0μF/100V	CA2A105MR080
C1010	CHIP CERAMIC CAP.(1608) B K 1000pF/50V	CHD1JK30B102
C1012	CHIP CERAMIC CAP.(1608) B K 4.7μF/6.3V	CHD0KK30B475
C1013	CHIP CERAMIC CAP.(1608) F Z 0.1μF/50V	CHD1JZ30F104
C1014	CHIP CERAMIC CAP.(1608) B K 1μF/25V	CHD1EK30B105
C1017	CHIP CERAMIC CAP.(1608) B K 1000pF/50V	CHD1JK30B102
C1018	CHIP CERAMIC CAP.(1608) C0G/J/220pF/100V	CA2A221MR133
	CONNECTORS	
CN101⚠	CONNECTOR S2P3-VH (LF)(SN)	JCVHC02JG002
CN102	CONNECTOR PRINT OSU JS-1125-04(K)	J3JT04CHY001
CN103	PH CONNECTOR TOP 6P B6B-PH-K-S (LF)(SN)	J3PHC06JG029
CN104	PH CONNECTOR TOP 10P B10B-PH-K-S(LF)(SN)	J3PHC10JG029
CN105	FPC/FFC CONNECTOR IMSA-9615S-07A-PP-A	JC96J07ER007
	DIODES	
D301	DIODE SWITCHING HSC119 TRF -E	QD1Z00HSC119
D401	DIODE SCHOTTKY SB3A0BH	NDWZ000SB3A0
D402	DIODE SCHOTTKY SB3A0BH	NDWZ000SB3A0
D403	DIODE SCHOTTKY SB3A0BH	NDWZ000SB3A0
D501	DIODE SCHOTTKY SB3150BH	NDWZ00SB3150
D502	DIODE SCHOTTKY SB3150BH	NDWZ00SB3150
D504	DIODE ZENER 1ZB27BB	NDWZ0001ZB27
D505	DIODE CMS03(TE12L Q)	QD1Z00CMS03Q
D506	DIODE ZENER 1N4741A B0 11V	NDLZ01N4741A
D507	DIODE ZENER SMD RKZ18B2KJR1	QD1B000RKZ18
D508	DIODE CMS03(TE12L Q)	QD1Z00CMS03Q
D601	DIODE RECTIFIEY 1N5408BH	NDL2001N5408
D602	DIODE RECTIFIEY 1N5408BH	NDL2001N5408
D603	DIODE RECTIFIEY 1N5408BH	NDL2001N5408
D604	DIODE RECTIFIEY 1N5408BH	NDL2001N5408
D605	DIODE FAST RECOVERY RS1JJTB	ND1Z0RS1JJTB
D606	RECTIFIER DIODE 1N4007	NDQZ001N4007
D608	DIODE FAST RECOVERY RS1GJTB	ND1Z0RS1GJTB
D609	ZENER DIODE SMD TFZGTR27B	QD1B000TFZ27
D610	DIODE FAST RECOVERY RS1GJTB	ND1Z0RS1GJTB
D612	DIODE ZENER 1ZB36BB	NDWZ0001ZB36
D613	ZENER DIODE SMD TFZGTR27B	QD1B000TFZ27
D615	DIODE FAST RECOVERY RS1JJTB	ND1Z0RS1JJTB
D616	RECTIFIER DIODE 1N4007	NDQZ001N4007
D618	ZENER DIODE EDZTE61 20B	QD1B000EDZ20
D622	ZENER DIODE SMD TFZGTR39B	QD1B000TFZ39
D623	ZENER DIODE SMD TFZGTR39B	QD1B000TFZ39
D1001	DIODE SCHOTTKY SB2A0BD	NDWZ000SB2A0
D1002	DIODE SWITCHING HSC119 TRF -E	QD1Z00HSC119
	ICS	
IC301	IC SHUNT REGULATOR SN431A-AT	NQSZ00SN431A
IC402	IC SHUNT REGULATOR SN431A-AT	NQSZ00SN431A
IC501	IC DCDC CONVERTER MP2482DN-LF-Z/ SOIC8/	NSCA0T09M005
IC601⚠	IC PHOTOCOUPLER TLP781F(D4-FUNBLL F)	QPEL781FBLLF
IC602	IC SWITCHING FA8A00N/SOP-8/8PIN	QSCA0T0FD010
IC701	IC SHUNT REGULATOR SN431A-AT	NQSZ00SN431A
IC1001	IC LED BACKLIGHT CONTROLLER HA7219PB/SOP/14PIN	NSCA0T00H005
	COILS	
L501	COIL POWER INDUCTORS DIP RCR1010NP-330M/33μH	LLF3300SF012
L601⚠	COIL LINE FILTER JLB20154/18MH	LLEG0Z0XB022
L1001	POWER INDUCTORS CWKBNP-220K	LLF2200kV002

Ref. No.	Description	Part No.
TRANSISTORS		
Q301	CHIP TRANSISTOR KTC3875S-Y-RTK/P	NQ1YKTC3875S
Q403	FET MOS FDD5612/Z	NF2ZFDD56120
Q601	FET MOS TK5A65D LS1FNDQ(M	QEEZTK5A65DM
Q602	FET MOS TK3P50D RQ(S	QF2Z0TK3P50D
Q603	FET MOS 2SK3471 TE12L F	QF1Z02SK3471
Q701	FET MOS FDD5612/Z	NF2ZFDD56120
Q702	CHIP TRANSISTOR KTA1504S-Y-RTK/P	NQ1YKTA1504S
Q703	CHIP TRANSISTOR KTC3875S-Y-RTK/P	NQ1YKTC3875S
Q1001	FET MOS SMD AP18T10AGH-HF	NF2Z18T10AGH
RESISTORS		
R301	RES CHIP 3216 1/4W J 240 Ω	RRX4241YF004
R302	RES CHIP 3216 1/4W J 240 Ω	RRX4241YF004
R303	RES CHIP 1608 1/10W F 2.20k Ω	RTW2201HH008
R305	RES CHIP 1608 1/10W F 10.0k Ω	RTW1002HH008
R306	RES CHIP 1608 1/10W F 10.0k Ω	RTW1002HH008
R307	RES CHIP 1608 1/10W F 10.0k Ω	RTW1002HH008
R308	RES CHIP 1608 1/10W F 2.70k Ω	RTW2701HH008
R311	RES CHIP 1608 1/10W F 22.0k Ω	RTW2202HH008
R312	RES CHIP 1608 1/10W F 2.70k Ω	RTW2701HH008
R313	RES CHIP 1608 1/10W F 2.70k Ω	RTW2701HH008
R314	RES CHIP 1608 1/10W J 10k Ω	RRXA103HH013
R404	RES CHIP 1608 1/10W F 1.00k Ω	RTW1001HH008
R407	RES CHIP 1608 1/10W F 10.0k Ω	RTW1002HH008
R409	RES CHIP 1608 1/10W F 10.0k Ω	RTW1002HH008
R410	METAL RES. 2W J 27 Ω	RN02270ZU001
R416	RES CHIP 3216 1/4W J 16 Ω	RRX4160HH034
R417	RES CHIP 3216 1/4W J 16 Ω	RRX4160HH034
R426	RES CHIP 1608 1/10W 0 Ω	RRXA000HH014
R430	RES CHIP 3216 1/4W J 16 Ω	RRX4160HH034
R431	RES CHIP 3216 1/4W J 16 Ω	RRX4160HH034
R503	RES CHIP 1608 1/10W J 100k Ω	RRXA104HH013
R504	RES CHIP 3216 1/4W J 100k Ω	RRX4104HH034
R505	RES CHIP 1608 1/10W J 16 Ω	RRXA160HH013
R506	RES CHIP 1608 1/10W F 1.50k Ω	RTW1501HH008
R507	CHIP RES. 1/10W F 39k Ω	RRXAFR5H3902
R508	CHIP RES. 1/10W F 3k Ω	RRXAFR5H3001
R509	RES CHIP 1608 1/10W F 4.70k Ω	RTW4701YF002
R510	RES CHIP 1608 1/10W J 10 Ω	RRXA100HH013
R511	RES CHIP 3216 1/4W J 20 Ω	RRX4200HH034
R512	RES CHIP 3216 1/4W J 20 Ω	RRX4200HH034
R513	RES CHIP 1608 1/10W F 100k Ω	RTW1003HH008
R602	RES CEMENT 5W/J/1.2 Ω	RWJ1R2PAK007
R603	METAL OXIDE FILM RES. 2W J 20k Ω	RN02203ZU001
R604	METAL OXIDE FILM RES. 2W J 20k Ω	RN02203ZU001
R605	RES CHIP 3216 1/4W J 270 Ω	RRX4271YF004
R606	RES CHIP 3216 1/4W J 47 Ω	RRX4470YF004
R610	RES CHIP 3216 1/3W J 0.15 Ω	RRJR15RYL008
R611	RES CHIP 3216 1/3W J 0.15 Ω	RRJR15RYL008
R612	RES CHIP 3216 1/3W J 0.15 Ω	RRJR15RYL008
R613	RES CHIP 3216 1/3W J 0.15 Ω	RRJR15RYL008
R615	RES CHIP 3216 1/4W J 6.8k Ω	RRX4682YF004
R617	RES CHIP 1608 1/10W J 3.3k Ω	RRXA332HH013
R621	RES CHIP 3216 1/4W J 10k Ω	RRX4103HH034
R622	RES CHIP 3216 1/4W J 10k Ω	RRX4103HH034
R623	RES CHIP 3216 1/4W J 1.0M Ω	RRX4105HH034
R624	RES CHIP 3216 1/4W J 1.0M Ω	RRX4105HH034
R625	RES CHIP 3216 1/4W J 1.0M Ω	RRX4105HH034
R626	RES CHIP 3216 1/4W J 620k Ω	RRX4624HH034
R627	METALOXIDE RES 2W J 100Ω	RNJ101PAK002
R628	RES CHIP 1608 1/10W J 1.5M Ω	RRXA155HH013
R701	RES CHIP 1608 1/10W J 10k Ω	RRXA103HH013
R702	RES CHIP 1608 1/10W J 1.8k Ω	RRXA182HH013
R703	RES CHIP 1608 1/10W J 10k Ω	RRXA103HH013

Ref. No.	Description	Part No.
R704	RES CHIP 1608 1/10W F 2.70k Ω	RTW2701HH008
R705	RES CHIP 1608 1/10W J 10k Ω	RRXA103HH013
R706	RES CHIP 1608 1/10W 0 Ω	RRXA000HH014
R707	RES CHIP 1608 1/10W F 10.0k Ω	RTW1002HH008
R708	CHIP RES. 1/10W F 39k Ω	RRXAFR5H3902
R709	CHIP RES. 1/10W F 3k Ω	RRXAFR5H3001
R710	METAL OXIDE FILM RES. 2W J 0.47 Ω	RN02R47ZU001
R711	RES CHIP 1608 1/10W F 22.0k Ω	RTW2202HH008
R1001	RES CHIP 1608 1/10W J 240 Ω	RRXA241HH013
R1002	RES CHIP 1608 1/10W J 240 Ω	RRXA241HH013
R1003	RES CHIP 1608 1/10W J 1.0k Ω	RRXA102HH013
R1004	RES CHIP 1608 1/10W J 10k Ω	RRXA103HH013
R1005	RES CHIP 1608 1/10W J 100k Ω	RRXA104HH013
R1006	RES CHIP 1608 1/10W J 10k Ω	RRXA103HH013
R1007	RES CHIP 1608 1/10W J 100k Ω	RRXA104HH013
R1008	RES CHIP 1608 1/10W J 10 Ω	RRXA100HH013
R1009	RES CHIP 1608 1/10W J 200 Ω	RRXA201HH013
R1010	RES CHIP 1608 1/10W F 100 Ω	RTW1000HH008
R1011	RES CHIP 1608 1/10W F 560k Ω	RTW5603HH008
R1012	RES CHIP 1608 1/10W F 510k Ω	RTW5103HH008
R1013	RES CHIP 1608 1/10W F 27.0k Ω	RTW2702HH008
R1014	RES CHIP 1608 1/10W F 100k Ω	RTW1003HH008
R1015	RES CHIP 1608 1/10W F 1.80k Ω	RTW1801HH008
R1016	RES CHIP 1608 1/10W F 6.20k Ω	RTW6201HH008
R1017	RES CHIP 1608 1/10W 0 Ω	RRXA000HH014
R1021	RES CHIP 1608 1/10W 0 Ω	RRXA000HH014
R1022	RES CHIP 3216 1/3W J 0.091 Ω	RRJ91MRYL008
R1023	RES CHIP 3216 1/3W J 0.091 Ω	RRJ91MRYL008
R1025	RES CHIP 1608 1/10W J 47 Ω	RRXA470YF002
R1026	RES CHIP 3216 1/4W J 10 Ω	RRX4100HH034
MISCELLANEOUS		
B19	HEAT SINK PNI A11N5μH	1EM435557A
BC501	WIRE CP STP-S-0.50	XZ40F0REN001
BC601	WIRE CP STP-S-0.50	XZ40F0REN001
BC605	BEADS INDUCTOR FBR07HA121SB-00	LLBF00STU030
BC606	BEADS INDUCTOR FBR07HA121SB-00	LLBF00STU030
BC1001	WIRE CP STP-S-0.50	XZ40F0REN001
F501	RES CHIP 1608 1/10W 0 Ω	RRXA000HH014
F602⚠	FUSE TIME RAG 2010T2.5A1	PDG21B0W3252
JS603	WIRE CP STP-S-0.50	XZ40F0REN001
JS604	WIRE CP STP-S-0.50	XZ40F0REN001
L35	SCREW B-TIGHT D3X8 BIND HEAD+	GBJB3080
SA601⚠	VARISTOR 10D 471K SVR	NVQZVR10D471
T601⚠	TRANS POWER BCK-28GD	LTT2PEMEK053

DIGITAL MAIN CBA UNIT

Ref. No.	Description	Part No.
MAN1	DIGITAL MAIN CBA UNIT	UPBMATCVT020
	*TUNER UNIT is not included and will also need to be purchased together when you replace the DIGITAL MAIN CBA UNIT.	
T1	TUNER UNIT DT21CN-2-E	UTNPSGTCL002

FUNCTION CBA UNIT

Ref. No.	Description	Part No.
FNC1	FUNCTION CBA UNIT	UPB000CVT007

32FL553P/10 32FL553/10
A33F1EP / A33F0EP
2013-04-05 Ver.1